THIS COPY IS PROVIDED ON A RESTRICTED BASIS AND IS NOT TO BE USED IN ANY WAY DETRIMENTAL TO THE INTERESTS OF PANDUIT CORP.

PANDUIT PART NUMBER	APPROXIMATE WEIGHT OF A PAIR OF INTERSECTION SPLICES
WGINTSPL	.49lb (222g)

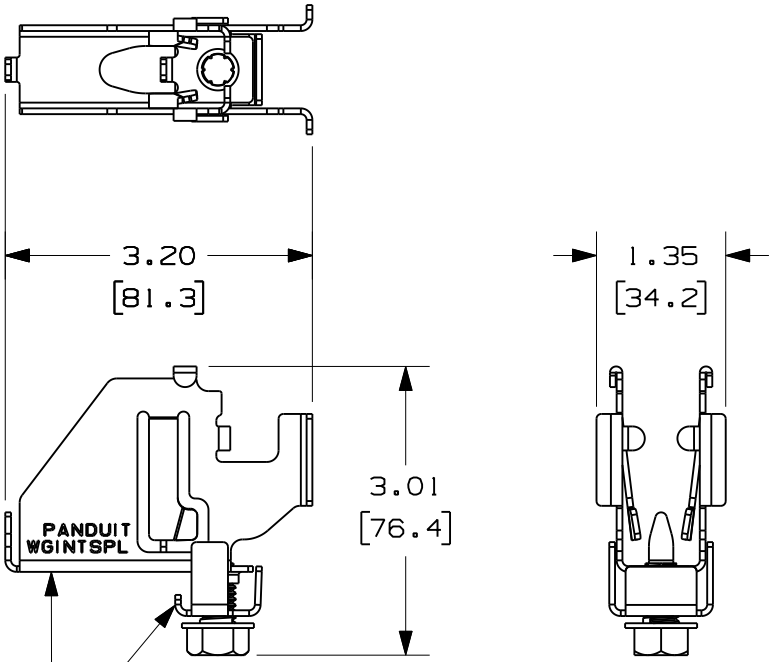

INTERSECTION SPLICE AND INTERSECTION CLIP ARE MADE OF 16 GAUGE STEEL. REFERENCE - .060" [1.52] THICK.

EACH WGINTSPL PACKAGE CONTAINS A PAIR OF THE ABOVE ASSEMBLY.

NOTES:

1. SEE CURRENT CATALOG FOR ADDITIONAL PART SUFFIXES TO INDICATE PACKAGE QUANTITY.

2. THE WYR-GRID INTERSECTION SPLICE ASSEMBLY IS USED FOR SPLICING WYR-GRID PATHWAY SECTIONS IN "T" AND "CROSS" CONFIGURATIONS.

3. THE WYR-GRID INTERSECTION SPLICE ASSEMBLY PACKAGE CONTAINS A PAIR OF SPLICES.

   EACH SPLICE CONSISTS OF:
   ONE (1) WYR-GRID INTERSECTION SPLICE,
   ONE (1) WYR-GRID INTERSECTION CLIP,
   ONE (1) 3/8-16 X 5/8 HEX HEAD WASHER HEAD TAPPING SCREW (GREEN).

4. DIMENSIONS IN PARENTHESES ARE IN METRIC.

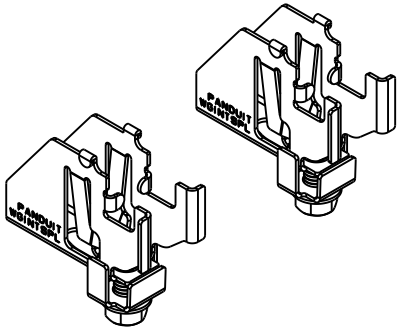

REV	DATE	BY	CHK	DESCRIPTION	ECN	-	R	CUST	SUP
1	1/17/11	JAHA	DWW	RELEASED TO PRODUCTION	09D017AG-DC			RN	
R	5/10/10	JCST	DWW	DRAWING RELEASED	---------		---	---	

CAD FILENAME/LAYERS: 09D017AG-DC_WGINTSPL/02B

PANDUIT CORP. TINLEY PARK, ILLINOIS

WYR-GRID INTERSECTION SPLICE ASSEMBLY (WGINTSPL) CUSTOMER DRAWING

UNLESS OTHERWISE SPECIFIED, DIMENSIONAL TOLERANCES ARE:
(.X) ± (.XXX) ±
(.XX) ± ANGLES ±

UNLESS OTHERWISE SPECIFIED, ALL DIMENSIONS ARE GIVEN IN INCHES, THIRD ANGLE PROJECTION.

DRAWN BY: JCST
DATE: 05/10/10
CHK'D: DWW
MAT'L: AS NOTED ABOVE
SCALE: .5X
DRAWING NO.: 09D017AG-DC
DWG SIZE: A