THIS COPY IS PROVIDED ON A RESTRICTED BASIS AND IS NOT TO BE USED IN ANY WAY DETRIMENTAL TO THE INTERESTS OF PANDUIT CORP.

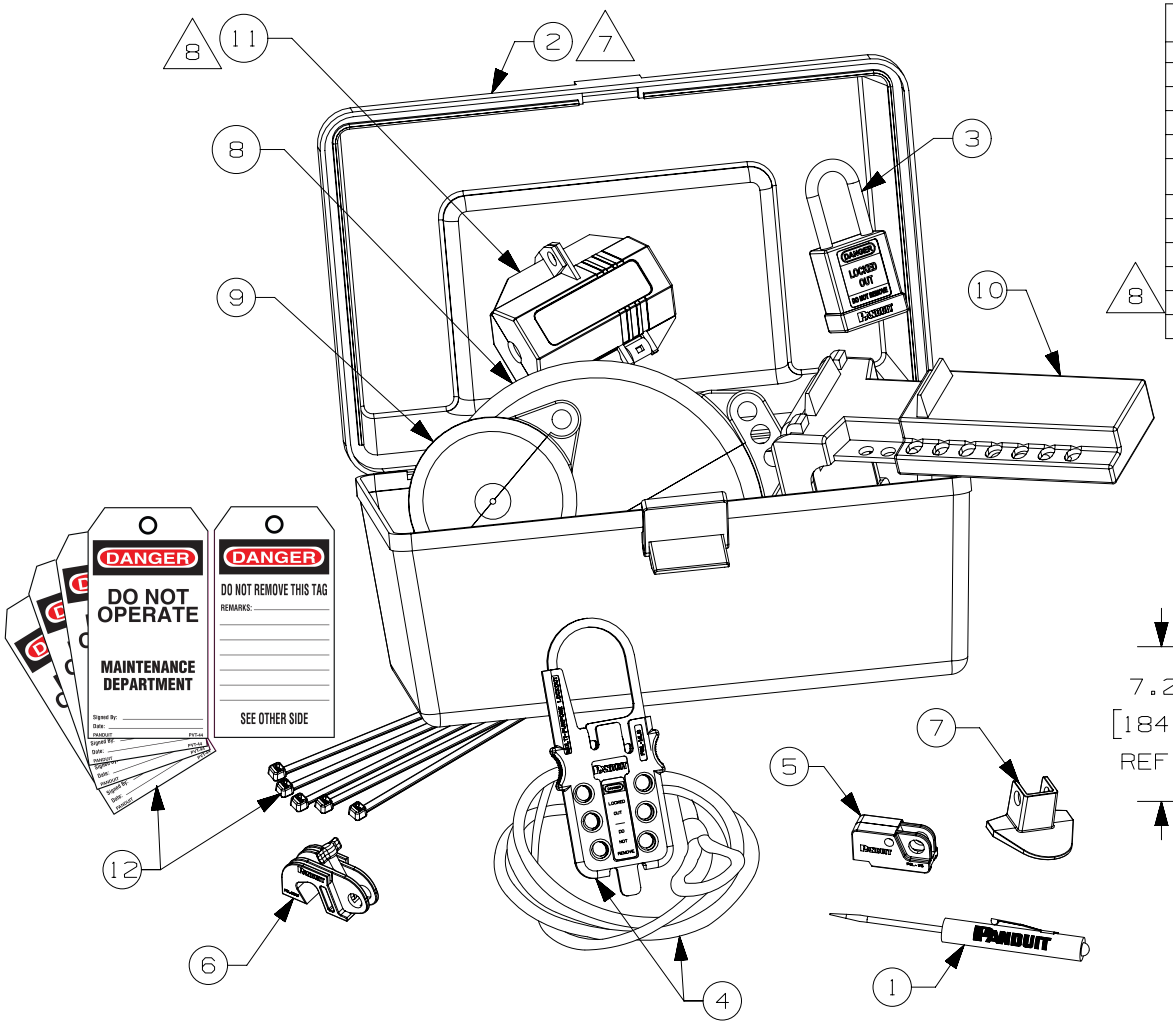

ITEM NO.	QTY. (PCS.)	PART NO.	DESCRIPTION
1	1	GMSDCOM	PANDUIT SCREWDRIVER
2	1	PSL-BX	CARRYING CASE
3	3	PSL-8	RED NON-CONDUCTIVE PADLOCK
4	1	PSL-MLD	MULTIPLE LOCKOUT DEVICE
5	2	PSL-WS	WALL SWITCH LOCKOUTS
6	2	PSL-CBNT	"NO TOOL" CIRCUIT BREAKER LOCKOUT DEVICE
7	2	PSL-P	PLUG LOCKOUT DEVICE
8	1	PSL-V6A	GATE VALVE LOCKOUT -5.0" [127 mm]
9	1	PSL-V2A	GATE VALVE LOCKOUT -2.5" [64 mm]
10	1	PSL-BV2	BALL VALVE LOCKOUT - 3.0" [76 mm]
11	1	PSL-CL110	120 Volt AC Cord Lockout Device, Red
12	10	PVT-44	"DO NOT OPERATE" MAINTENANCE TAGS

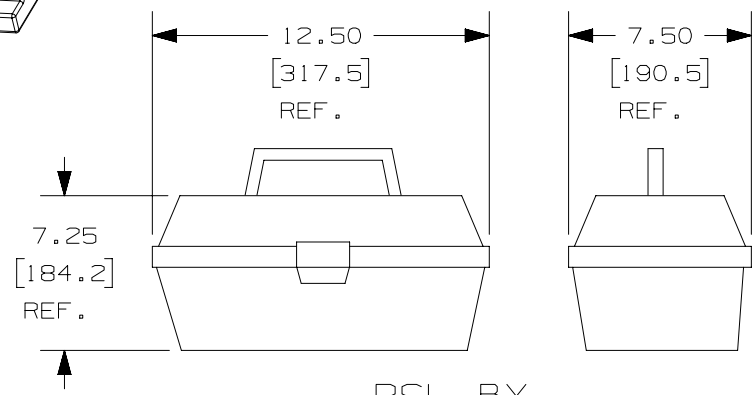

PSL-BX
PLASTIC CARRYING CASE

REV	DATE	BY	CHK	APR	DESCRIPTION	ECN
8	3/3/2020	RVU	DJW	JHAC	REPLACED LATEST RECTANGLE MODEL TO CURRENT HEXAGON MODEL.	GAECN05588
7	4/21/17	RVU	DJW	JHAC	UPDATE ALL ISO VIEWS WITH PSL-BX. UPDATE TABLE. REMOVE GMPSL-INMLD, AND GMPSL-INI, ITEM 14, & 15.	GAECN04106
6	8/29/16	RVU	SEWH	JHAC	REPLACE WITH PSL-CBNTWIP TO PSL-CBNT.	GAECN03608
5	6/17/14	RVU	MJPF	MSAD	7.25 WAS 5.0, 12.50 WAS 14.5, AND 7.50 WAS 6.5. UPDATE ON CASE DESIGN.	GAECN02088
4	11/11/09	RVU			PSL-8 WAS PSL-3RED-LS. ADD LEADERS 15 AND 16 FOR GMPSL-INMLD, AND PSL-IN1.	5905
3	2/5/08	RVU			PSL-PL1REDY ADDED.	5279
2	12/10/07	RVU			PSL-3RED-LS WAS PSL-5RED-LS.	5230
1	9/13/06	RVU			MISC. REVISION.	4659
0	10/18/05	RVU			DRAWING RELEASE.	4258

TITLE

PSL-KT-MR0A
MAINTENANCE LOCKOUT KIT

CUSTOMER DRAWING

ITEM REVISION NAME: I00619CX/10

DATASET FILE NAME: I00619CX_DC_C10387/10J

UNLESS OTHERWISE SPECIFIED, DIMENSIONAL TOLERANCES ARE: IN [mm]

.X ± .XXX ±

.XX ± ANGLES ±

THIRD ANGLE PROJECTION

MATERIAL: N/A

DRAWING NUMBER: C10387

DRAWN BY	DATE	CHK	SCALE		SIZE
RVU	10/18/05	RVU	NTS	SHT 1 OF 1	A