THIS COPY IS PROVIDED ON A RESTRICTED BASIS AND IS NOT TO BE USED IN ANY WAY DETRIMENTAL TO THE INTERESTS OF PANDUIT CORP.

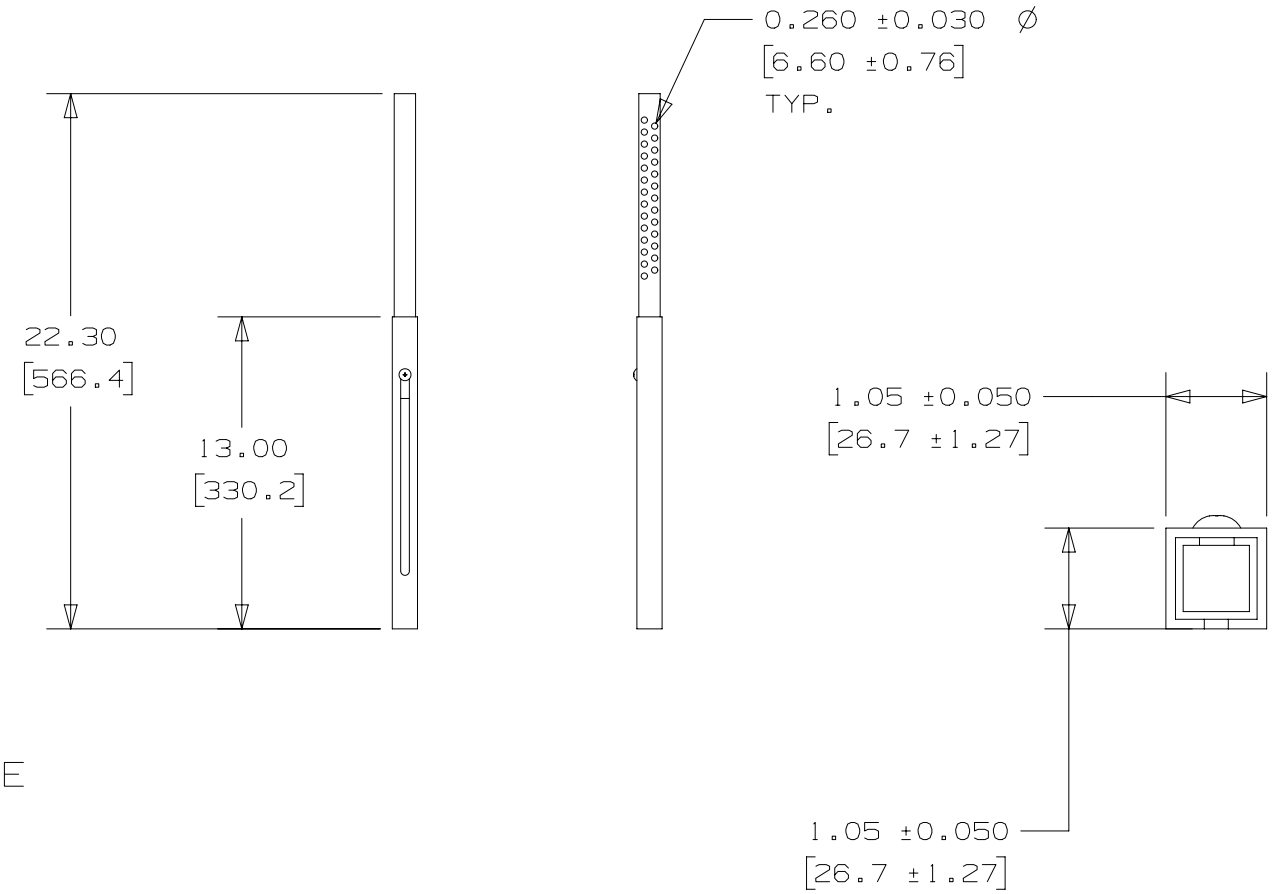

NOTES:

1) DIMENSIONS IN [ ] ARE MILLIMETERS

REV	DATE	BY	CHK	APR	DESCRIPTION	ECN
00	08/14/18	DAPE	DJW	JHAC	RELEASE TO PRODUCTION	GAECN04604

TITLE

Electrical Panel Lockout

CUSTOMER DRAWING

ITEM REVISION NAME: 00220NDZ/00

DATASET FILE NAME: 00220NDZ_DC/00A

UNLESS OTHERWISE SPECIFIED, DIMENSIONAL TOLERANCES ARE: IN [mm]

.X ± .5 [12.7] .XXX ± .1 [2.54]

.XX ± .25 [6.35] ANGLES ± .5 °

THIRD ANGLE PROJECTION

MATERIAL: PLASTIC

DRAWING NUMBER: 00220NDZ_DC

DRAWN BY	DATE	CHK	SCALE	SHT 1 OF 1	SIZE
DAPE	08/14/18	ANRO	NTS		A