THIS COPY IS PROVIDED ON A RESTRICTED BASIS AND IS NOT TO BE USED IN ANY WAY DETRIMENTAL TO THE INTERESTS OF PANDUIT CORP.

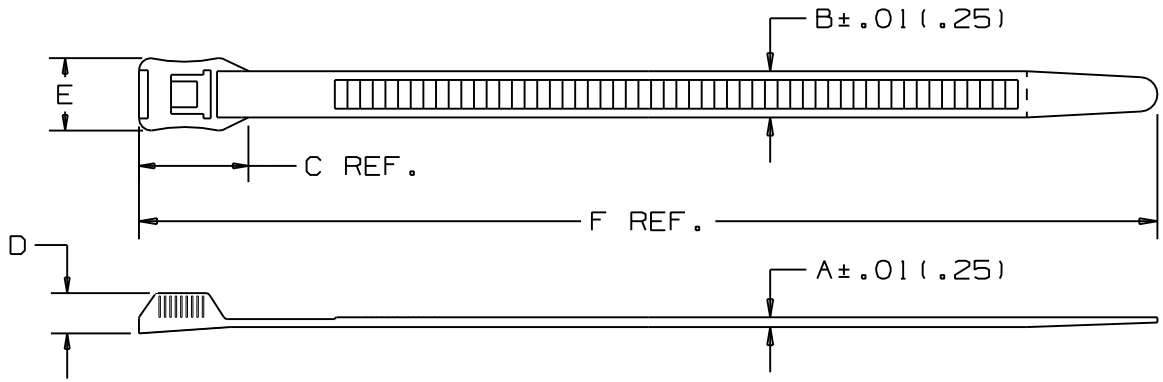

PANDUIT PART NO.	BUNDLE DIA. MIN. in (mm)	BUNDLE DIA. MAX. in (mm)	A in (mm)	B in (mm)	C in (mm)	D in (mm)	E in (mm)	F in (mm)	MIN. LOOP TENSILE lbs. (N)	CROSS SECTION	WEIGHT lbs. (g)/100 pcs.
IT940	.33 (8)	1.57 (40)	.065 (1.7)	.350 (8.9)	.82 (20.8)	.30 (7.6)	.556 (14.1)	6.8 (173)	124 (552)	LIGHT HEAVY	.61 (277)
IT965	.33 (8)	2.56 (65)	.065 (1.7)	.350 (8.9)	.82 (20.8)	.30 (7.6)	.556 (14.1)	10.1 (257)	124 (552)	LIGHT HEAVY	.87 (394)
IT9100	.33 (8)	3.94 (100)	.065 (1.7)	.350 (8.9)	.82 (20.8)	.30 (7.6)	.556 (14.1)	14.1 (358)	124 (552)	LIGHT HEAVY	1.17 (531)
* IT9115	.33 (8)	4.53 (115)	.065 (1.7)	.350 (8.9)	.82 (20.8)	.30 (7.6)	.556 (14.1)	15.3 (389)	124 (552)	LIGHT HEAVY	1.31 (598)

NOTES:
*1) SHORT TIP TIE.
2) SEE CURRENT PRICE SHEET FOR PART NUMBER SUFFIX DESIGNATION FOR PACKAGE SIZE AND PART COLOR.

DIMENSIONS IN PARENTHESES ARE IN METRIC UNITS

REV	DATE	BY	CHK	DESCRIPTION	ECN	- R	CUST	SUP
				CHANGED CROSS SECTION FROM "HEAVY" TO "LIGHT HEAVY				
9	6/2/06	MJVE	? BOBK	ADDED "C" DIMENSION FOR HEAD LENGTH CORRECTED MIN BUNDLE DIAMETER	26873	9	? BOBK	

PANDUIT CORP. TINLEY PARK, ILLINOIS

IN-LINE CABLE TIES
IT SERIES

UNLESS OTHERWISE SPECIFIED, DIMENSIONAL TOLERANCES ARE:
(.X) ± ---- (.XXX) ± .020(.51)
(.XX) ± .02(.5) ANGLES ± ----

UNLESS OTHERWISE SPECIFIED, ALL DIMENSIONS ARE GIVEN IN INCHES, THIRD ANGLE PROJECTION.

DRAWN BY C.HARVELL
DATE 01/04/94
CHK'D HVP
MAT'L: NYLON 6.6
SCALE NONE
DRAWING NO. SS-26873
DWG SIZE A