THIS COPY IS PROVIDED ON A RESTRICTED BASIS AND IS NOT TO BE USED IN ANY WAY DETRIMENTAL TO THE INTERESTS OF PANDUIT CORP.

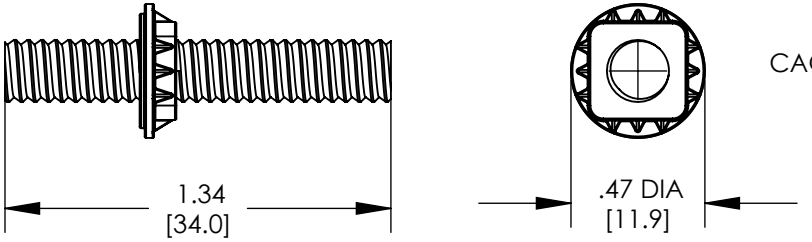

CAGE NUT BONDING STUD (QTY. 25)

NOTES:

1. CAGE NUT BONDING STUD KIT PART NUMBER: CGNBSK
2. PACKAGING: 4 KITS PER BOX
3. DIMENSIONS IN PARENTHESIS ARE MILLIMETERS.
4. ALL COMPONENTS THAT MAKE UP THIS KIT ARE RoHS COMPLIANT.

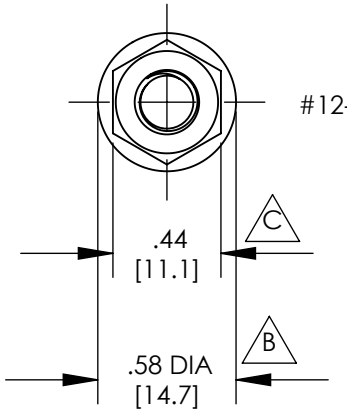

#12-24 BONDING NUT (QTY. 50)

5cc TUBE ANTI-OXIDANT PASTE (QTY. 1)

A

REV	DATE	BY	CHK	APR	DESCRIPTION	ECN
01	11/22	JHNU	KLN	JADE	C. REVISED DIMENSION: .44 [11.1] WAS .38 [9.5] B. REVISED DIMENSION: .58 [14.7] WAS .47 [11.9] A. REVISED TITLE BLOCK	127033
00	2/07	JHNU	JMAR	JMAR	DRAWING RELEASED	PC00674

TITLE
CAGE NUT BONDING STUD KIT
(CGNBSK)
CUSTOMER DRAWING

ITEM REVISION NAME: N41698BB/01

DATASET FILE NAME: N41698BB-C41698 r01.SLDDRW

PANDUIT

UNLESS OTHERWISE SPECIFIED,
DIMENSIONAL TOLERANCES ARE: IN [mm]
.X ± .XXX ±
.XX ± ANGLES ±

THIRD ANGLE PROJECTION

MATERIAL

DRAWING NUMBER: C41698

DRAWN BY	DATE	CHK	SCALE	SHEET	SIZE
JHNU	2/07	JMAR	NONE	SHEET 1 OF 1	A