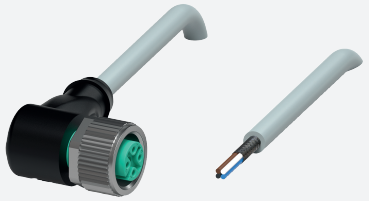

Cable socket, shielded

V1-W-2M-PUR-ABG

- Degree of protection IP68 / IP69
- Halogen-free
- Shield connected to screw connection
- Specific design protects against loosening and inaccurate installation

Female cordset single-ended M12 angled A-coded, 4-pin, PUR cable grey, shielded

Dimensions

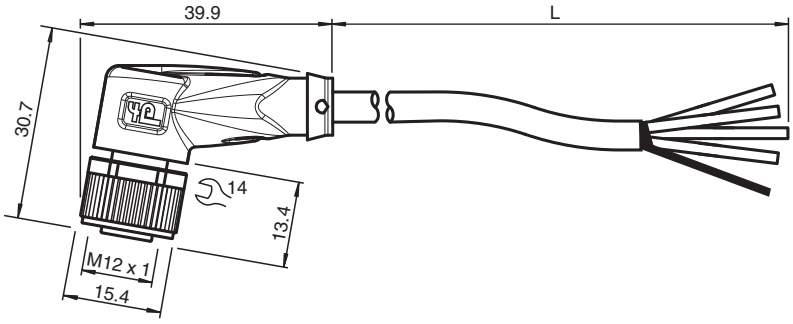

Technical Data

General specifications		
Connector 1		
Connection		socket
Construction type		M12
Style		angled
Locking		screw connection
Number of pins		4
Coding		A-coded
Connector 2		
Connection		cable end
Electrical specifications		
Operating voltage	U_B	max. 250 V AC/DC
Operating current	I_B	max. 4 A
Conformity		
Degree of protection		EN 60529
Plug connection		connector M12 x 1 : IEC 61076-2-101
Halogen-free		DIN VDE 0472-815 DIN EN 50267-2-1
Ambient conditions		
Ambient temperature		
Plug connector		-40 ... 90 °C (-40 ... 194 °F)
Cable, fixed		-40 ... 80 °C (-40 ... 176 °F)

Release date: 2024-06-14 Date of issue: 2024-06-14 Filename: 240005-0001_eng.pdf

Technical Data

Cable, flexing		-25 ... 80 °C (-13 ... 176 °F)
Pollution degree		3
Mechanical specifications		
Plug connector		
Tightening torque		0.6 Nm
Loosening protection		available
Tool installation		straight knurling and hexagon nut SW = 14 mm
Mating cycles		min. 100
Shielding		shield connected to screw connection
Degree of protection		IP68 / IP69
Cable		according to IEC/EN 60228 (DIN VDE 0295) class 5
Sheath diameter		4.8 mm
Bending radius		> 10 x cable diameter, moving > 5 x cable diameter, fixed
Sheath stripping force		max. 100 N / 300 mm
Sheath color		grey (similar to RAL 7001)
Number of cores		4
Core cross section		0.34 mm²
Cores color		Core 1: brown Core 2: white Core 3: blue Core 4: black
Core construction		19 x 0.15 mm Ø
Shield		tinned copper braiding, 85 % coverage
Length	L	2 m
Cable code		Li 9Y 11YM 4 x 0.34
Mass		86.84 g
Material		
Halogen-free		yes
Plug connector		
Screw connection		Zinc diecast, nickel-plated
Body		TPU, black
Seal		FKM
Contact surface		gold plated (Au)
Flammability		V-2
Cable		
Sheathing		PUR based on polyether
Core insulation		PP
Chemical resistance		good

Connection Assignment

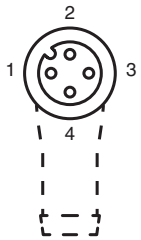

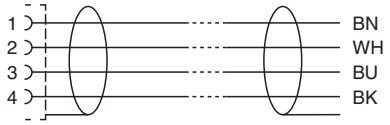

Release date: 2024-06-14 Date of issue: 2024-06-14 Filename: 240005-0001_eng.pdf