RFID read/write device

IPH-FP-V1

- Connection via V1 (M12 x 1) plug connection
- Dual-LED for function display
- Degree of protection IP67
- For connection to IDENT*Control* control interface

LF RFID read/write device for IDENTControl

Dimensions

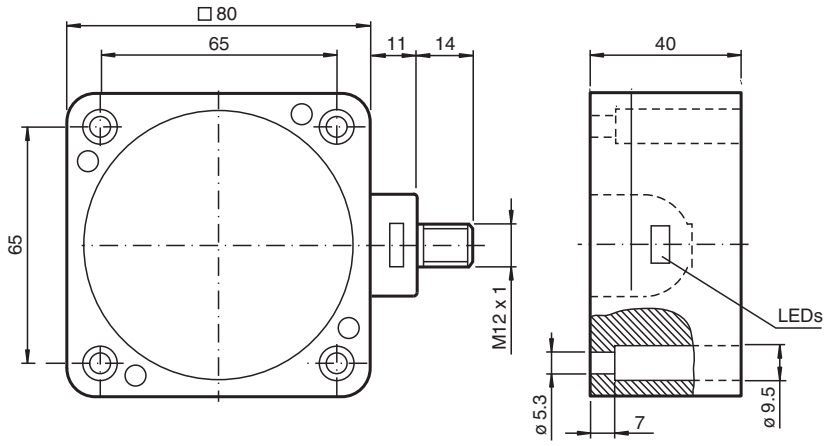

Technical Data

General specifications		
Operating frequency		125 kHz
Transfer rate		2 kBit/s
Sensing range		
Read distance		0 ... 100 mm
Write distance		0 ... 80 mm
Width		max. 80 mm
Operating distance		maximum: 100 mm
UL File Number		E87056
MTBF		350 a (Operation at +40 °C)
Indicators/operating means		
LED green/yellow		green: power on green flashing: read/write attempt performed yellow: data carrier detected
Electrical specifications		
Power consumption	P_0	≤ 1.2 W
Supply		from the IDENTControl
Directive conformity		

Release date: 2023-08-08 Date of issue: 2023-08-08 Filename: 126055_eng.pdf

Technical Data

Radio equipment	
Directive 2014/53/EU	EN 301489-1 EN 301489-3 EN 300330 EN 62368-1 EN 50364
RoHS	
Directive 2011/65/EU (RoHS)	IEC/EN 63000
Standard conformity	
Degree of protection	EN 60529
RFID	ISO/IEC 18000-2
Ambient conditions	
Ambient temperature	-25 ... 70 °C (-13 ... 158 °F)
Storage temperature	-40 ... 85 °C (-40 ... 185 °F)
Mechanical specifications	
Housing length	113 mm
Housing width	80 mm
Housing height	40 mm
Degree of protection	IP67
Connection	connector M12 x 1
Material	
Housing	PBT
Base	diecast aluminum
Encapsulation compound	Fermadur
Installation	
Distance between two heads	Multiplex on: ≥ 100 mm Multiplex off: ≥ 550 mm
Mass	approx. 380 g

Connection

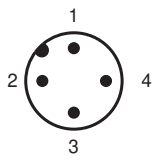

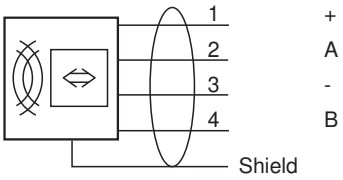

Accessories

	IC-KP-B6-V15B	Control interface unit IDENTControl with PROFIBUS DP interface
	IC-KP-B17-AIDA1	IDENTControl control interface with Ethernet interface for TCP/IP, PROFINET, EtherNet/IP, and MODBUS TCP protocols
	IC-KP2-2HRX-2V1	Control interface unit IDENTControl Compactwith serial interface RS-232 and RS-485
	IC-KP2-2HB6-V15B	Control interface unit IDENTControl Compact with interface for PROFIBUS DP
	IC-KP2-2HB17-2V1D	IDENTControl Compact control interface with Ethernet interface for TCP/IP, PROFINET, EtherNet/IP, and MODBUS TCP protocols

Release date: 2023-08-08 Date of issue: 2023-08-08 Filename: 126055_eng.pdf

Accessories

	IC-KP2-2HB21-2V1D	Control interface unit IDENTControl Compact with EtherCAT interface
	IPC02-26-T6 10pcs	Code carrier
	IPC03-C1 10pcs	Data carrier
	IPC03-12.4 10pcs	Data carrier
	IPC03-30P	Data carrier
	IPC03-58	Data carrier
	V1-G-2M-PUR-ABG-V1-W	Cordset M12 socket straight to M12 plug angled A-coded, 4-pin, PUR cable grey, shielded
	V1-G-5M-PUR-ABG-V1-W	Cordset M12 socket straight to M12 plug angled A-coded, 4-pin, PUR cable grey, shielded
	V1-G-10M-PUR-ABG-V1-W	Cordset M12 socket straight to M12 plug angled A-coded, 4-pin, PUR cable grey, shielded
	IPC03-50P	Data carrier
	IPC02-50P	Code carrier
	IPC02-12 50pcs	Code carrier

Release date: 2023-08-08 Date of issue: 2023-08-08 Filename: 126055_eng.pdf