OMRON

Machine Automation Controller
NX1

Powerful functionality in a compact design

Features

- Fast and accurate control by synchronizing all machine devices with the PLC and Motion Engines
- Three built-in industrial Ethernet ports
- OPC UA server functionality
- Up to 12 axes of control via EtherCAT
- Up to 32 local NX I/O Units
- DC power supply without battery backup
- Fully conforms to IEC 61131-3 standard programming
- PLCopen Function Blocks for Motion Control allow users to create complex programs quickly and easily
- Direct connection to a database, with no special unit, software, or middleware required (NX102-□□20)

System Configuration

Basic System Configuration

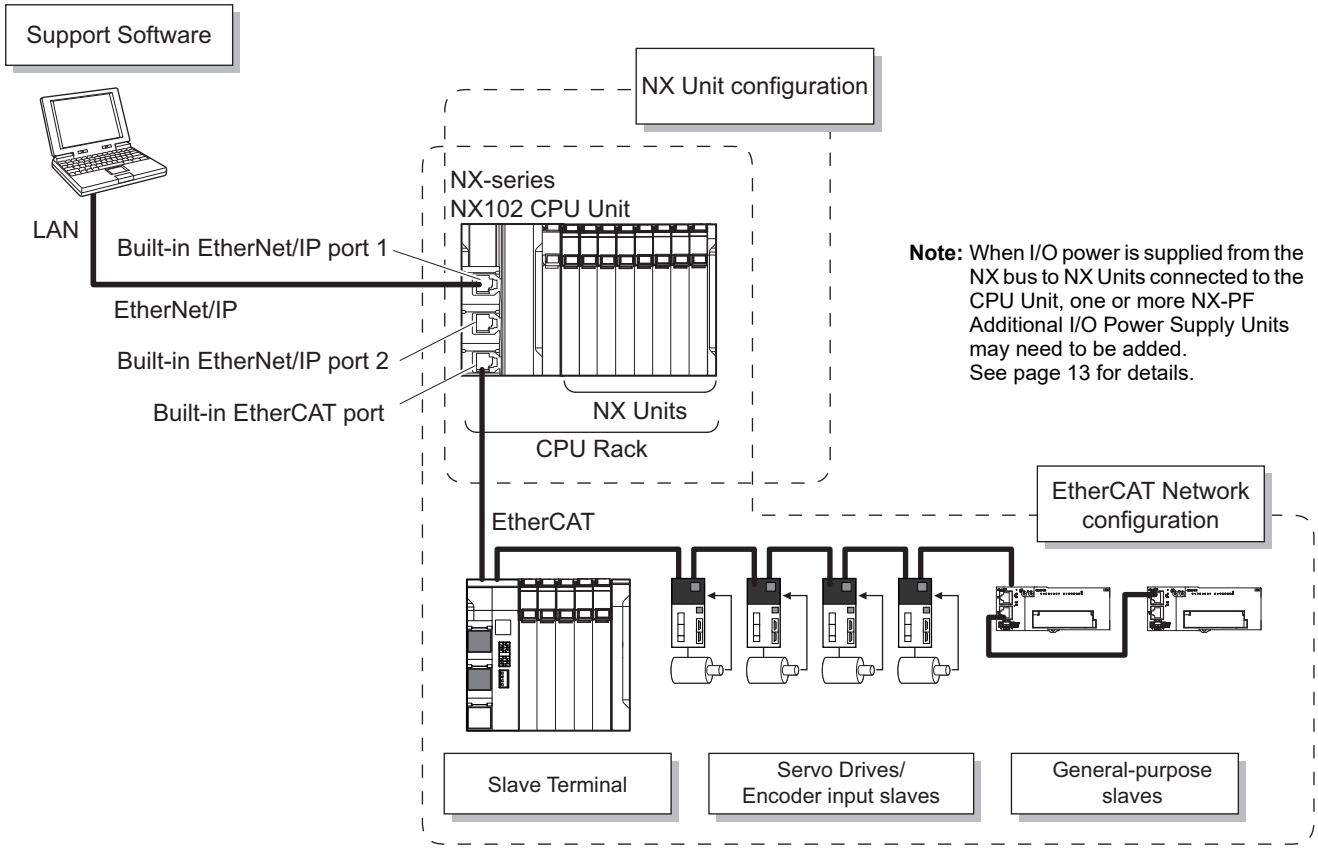

Note: When I/O power is supplied from the NX bus to NX Units connected to the CPU Unit, one or more NX-PF Additional I/O Power Supply Units may need to be added.
See page 13 for details.

Ordering Information

Applicable standards

Refer to the OMRON website (www.ia.omron.com) or ask your OMRON representative for the most recent applicable standards for each model.

NX-series NX102 CPU Units

Product name	Specifications					Model
	Program capacity	Memory capacity for variables	Maximum number of used real axes			
				Motion control axes	Single-axis position control axes	
NX102 CPU Unit	5 MB	1.5 MB (Retained during power interruption)/32 MB (Not retained during power interruption)	12	8	4	**NX102-1200**
			8	4	4	**NX102-1100**
			6	2	4	**NX102-1000**
			4	0	4	**NX102-9000**
NX102 Database Connection CPU Unit			12	8	4	**NX102-1220** *1
			8	4	4	**NX102-1120** *1
			6	2	4	**NX102-1020** *1
			4	0	4	**NX102-9020** *1

*1. NX102-1220-DH, NX102-1120-DH, NX102-1020-DH, NX102-9020-DH are products equipped with time series data collection system. Consult your Omron sales representative for details.

Note: 1. One NX-END02 End Cover is provided with the NX102-□□□□, and the HMC-SD292 Memory Card is provided with the NX102-□□20.

2. The battery is not mounted when the product is shipped. Refer to the *Battery* for details.

NX Units

Digital Input Units

Product Name	Specifications					Model
	Number of points	Internal I/O common	Rated input voltage	I/O refreshing method	ON/OFF response time	
DC Input Unit **(Screwless Clamping Terminal Block, 12 mm Width/ 24 mm Width)**	4 points	NPN	12 to 24 VDC	Switching Synchronous I/O refreshing and Free-Run refreshing	20 µs max./400 µs max.	**NX-ID3317**
			24 VDC		100 ns max./100 ns max.	**NX-ID3343**
				Input refreshing with input changed time only *1		**NX-ID3344**
		PNP	12 to 24 VDC	Switching Synchronous I/O refreshing and Free-Run refreshing	20 µs max./400 µs max.	**NX-ID3417**
			24 VDC		100 ns max./100 ns max.	**NX-ID3443**
				Input refreshing with input changed time only *1		**NX-ID3444**
	8 points	NPN		Switching Synchronous I/O refreshing and Free-Run refreshing	20 µs max./400 µs max.	**NX-ID4342**
		PNP				**NX-ID4442**
	16 points	NPN				**NX-ID5342**
		PNP				**NX-ID5442**
	32 points	NPN				**NX-ID6342**
		PNP				**NX-ID6442**
DC Input Unit **(M3 Screw Terminal Block, 30 mm Width)**	16 points	For both NPN/PNP	24 VDC	Switching Synchronous I/O refreshing and Free-Run refreshing	20 µs max./400 µs max.	**NX-ID5142-1**
DC Input Unit **(MIL Connector, 30 mm Width)**	16 points	For both NPN/PNP	24 VDC	Switching Synchronous I/O refreshing and Free-Run refreshing	20 µs max./400 µs max.	**NX-ID5142-5**
	32 points					**NX-ID6142-5**

Product Name	Specifications					Model
	Number of points	Internal I/O common	Rated input voltage	I/O refreshing method	ON/OFF response time	
DC Input Unit **(Fujitsu/OTAX Connector, 30 mm Width)**	32 points	For both NPN/PNP	24 VDC	Switching Synchronous I/O refreshing and Free-Run refreshing	20 µs max./400 µs max.	**NX-ID6142-6**
AC Input Unit **(Screwless Clamping Terminal Block, 12 mm Width)**	4 points	200 to 240 VAC, 50/60 Hz (170 to 264 VAC, ±3 Hz)		Free-Run refreshing	10 ms max./40 ms max.	**NX-IA3117**

*1. To use input refreshing with input changed time, the EtherCAT Coupler Unit with unit version 1.1 or later and the Sysmac Studio version 1.07 or higher are required.

Digital Output Units

Product Name	Specifications						Model
	Number of points	Internal I/O common	Maximum value of load current	Rated voltage	I/O refreshing method	ON/OFF response time	
Transistor Output Unit **(Screwless Clamping Terminal Block, 12 mm Width/ 24 mm Width)**	2 points	NPN	0.5 A/point, 1 A/Unit	24 VDC	Output refreshing with specified time stamp only *1	300 ns max./ 300 ns max.	**NX-OD2154**
		PNP					**NX-OD2258**
	4 points	NPN	0.5 A/point, 2 A/Unit	12 to 24 VDC	Switching Synchronous I/O refreshing and Free- Run refreshing	0.1 ms max./ 0.8 ms max.	**NX-OD3121**
				24 VDC		300 ns max./ 300 ns max.	**NX-OD3153**
		PNP				0.5 ms max./ 1.0 ms max.	**NX-OD3256**
						300 ns max./ 300 ns max.	**NX-OD3257**
			2 A/point, 8 A/Unit			0.5 ms max./ 1.0 ms max.	**NX-OD3268**
	8 points	NPN	0.5 A/point, 4 A/Unit	12 to 24 VDC		0.1 ms max./ 0.8 ms max.	**NX-OD4121**
		PNP		24 VDC		0.5 ms max./ 1.0 ms max.	**NX-OD4256**
	16 points	NPN		12 to 24 VDC		0.1 ms max./ 0.8 ms max.	**NX-OD5121**
		PNP		24 VDC		0.5 ms max./ 1.0 ms max.	**NX-OD5256**
	32 points	NPN	0.5 A/point, 4 A/terminal block, 8 A/Unit	12 to 24 VDC		0.1 ms max./ 0.8 ms max.	**NX-OD6121**
		PNP		24 VDC		0.5 ms max./ 1.0 ms max.	**NX-OD6256**
Transistor Output Unit **(M3 Screw Terminal Block, 30 mm Width)**	16 points	NPN	0.5 A/point, 5 A/Unit	12 to 24 VDC	Switching Synchronous I/O refreshing and Free- Run refreshing	0.1 ms max./ 0.8 ms max.	**NX-OD5121-1**
		PNP		24 VDC		0.5 ms max./ 1.0 ms max.	**NX-OD5256-1**

Product Name	Specifications						Model
	Number of points	Internal I/O common	Maximum value of load current	Rated voltage	I/O refreshing method	ON/OFF response time	
Transistor Output Unit **(MIL Connector, 30 mm Width)**	16 points	NPN	0.5 A/point, 2 A/Unit	12 to 24 VDC	Switching Synchronous I/O refreshing and Free- Run refreshing	0.1 ms max./ 0.8 ms max.	**NX-OD5121-5**
		PNP		24 VDC		0.5 ms max./ 1.0 ms max.	**NX-OD5256-5**
	32 points	NPN	0.5 A/point, 2 A/ common, 4 A/Unit	12 to 24 VDC		0.1 ms max./ 0.8 ms max.	**NX-OD6121-5**
		PNP		24 VDC		0.5 ms max./ 1.0 ms max.	**NX-OD6256-5**
Transistor Output Unit **(Fujitsu/OTAX Connector, 30 mm Width)**	32 points	NPN	0.5 A/point, 2 A/ common, 4 A/Unit	12 to 24 VDC	Switching Synchronous I/O refreshing and Free- Run refreshing	0.1 ms max./ 0.8 ms max.	**NX-OD6121-6**
Relay Output Unit **(Screwless Clamping Terminal Block, 12 mm Width/24 mm Width)**	2 points	Relay type: N.O.	250 VAC/2 A (cosϕ=1), 250 VAC/ 2 A (cosϕ=0.4), 24 VDC/2 A, 4 A/Unit		Free-Run refreshing	15 ms max./ 15 ms max.	**NX-OC2633**
		Relay type: N.O.+N.C.					**NX-OC2733**
	8 points	Relay type: N.O.	250 VAC/2 A (cosϕ=1), 250 VAC/ 2 A (cosϕ=0.4), 24 VDC/2 A, 8 A/Unit		Free-Run refreshing	15 ms max./ 15 ms max.	**NX-OC4633**

*1. To use input refreshing with input changed time, the EtherCAT Coupler Unit with unit version 1.1 or later and the Sysmac Studio version 1.07 or higher are required.

Digital Mixed I/O Units

Product Name	Specifications					Model
	Number of points	Internal I/O common	Maximum value of load current	I/O refreshing method	ON/OFF response time	
DC Input/Transistor Output Unit **(MIL Connector, 30 mm Width)**	Outputs: 16 points Inputs: 16 points	Outputs: NPN Inputs: For both NPN/PNP	Outputs: 12 to 24 VDC Inputs: 24 VDC	Switching Synchronous I/O refreshing and Free-Run refreshing	Outputs: 0.1 ms max./ 0.8 ms max. Inputs: 20 µs max./ 400 µs max.	**NX-MD6121-5**
		Outputs: PNP Inputs: For both NPN/PNP	Outputs: 24 VDC Inputs: 24 VDC		Outputs: 0.5 ms max./ 1.0 ms max. Inputs: 20 µs max./ 400 µs max.	**NX-MD6256-5**
DC Input/Transistor Output Unit **(Fujitsu/OTAX Connector, 30 mm Width)**	Outputs: 16 points Inputs: 16 points	Outputs: NPN Inputs: For both NPN/PNP	Outputs: 12 to 24 VDC Inputs: 24 VDC	Switching Synchronous I/O refreshing and Free-Run refreshing	Outputs: 0.1 ms max./ 0.8 ms max. Inputs: 20 µs max./ 400 µs max.	**NX-MD6121-6**

High-speed Analog Input Units

Product name	Specifications								Model
	Number of points	Input range	Resolution	Input method	Conversion time	Trigger input section		I/O refreshing method	
						Number of points	Internal I/O common		
High-speed Analog Input Unit	4	-10 to 10 V -5 to 5 V 0 to 10 V 0 to 5 V 1 to 5 V 0 to 20 mA 4 to 20 mA	• Input range of -10 to 10 V or -5 to 5 V: 1/64,000 (full scale) • Other input range: 1/32,000 (full scale)	Differ-ential input	5 µs per channel	4	NPN	Synchronous I/O refreshing	NX-HAD401
							PNP		NX-HAD402

Analog Input Units

Product Name	Specifications									Model
	Number of points	Input range	Resolution	Conversion value, decimal number (0 to 100%)	Over all accuracy (25°C)	Input method	Conversion time	Input impedance	I/O refreshing method	
Voltage Input Unit	2	-10 to +10V	1/8000	-4000 to 4000	±0.2% (full scale)	Singleended input	250 µs/ point	1MΩ min.	Free-Run re-freshing	NX-AD2603
						Differential Input				NX-AD2604
			1/30000	-15000 to 15000	±0.1% (full scale)	Differential Input	10 µs/ point		Selectable Syn-chronous I/O re-freshing or Free-Run refreshing	NX-AD2608
	4		1/8000	-4000 to 4000	±0.2% (full scale)	Singleended input	250 µs/ point		Free-Run re-freshing	NX-AD3603
						Differential Input				NX-AD3604
			1/30000	-15000 to 15000	±0.1% (full scale)	Differential Input	10 µs/ point		Selectable Syn-chronous I/O re-freshing or Free-Run refreshing	NX-AD3608
	8		1/8000	-4000 to 4000	±0.2% (full scale)	Singleended input	250 µs/ point		Free-Run re-freshing	NX-AD4603
						Differential Input				NX-AD4604
			1/30000	-15000 to 15000	±0.1% (full scale)	Differential Input	10 µs/ point		Selectable Syn-chronous I/O re-freshing or Free-Run refreshing	NX-AD4608
Current Input Unit	2	4 to 20mA	1/8000	0 to 8000	±0.2% (full scale)	Singleended input	250 µs/ point	250Ω	Free-Run re-freshing	NX-AD2203
						Differential Input				NX-AD2204
			1/30000	0 to 30000	±0.1% (full scale)	Differential Input	10 µs/ point		Selectable Syn-chronous I/O re-freshing or Free-Run refreshing	NX-AD2208
	4		1/8000	0 to 8000	±0.2% (full scale)	Singleended input	250 µs/ point		Free-Run re-freshing	NX-AD3203
						Differential Input				NX-AD3204
			1/30000	0 to 30000	±0.1% (full scale)	Differential Input	10 µs/ point		Selectable Syn-chronous I/O re-freshing or Free-Run refreshing	NX-AD3208
	8		1/8000	0 to 8000	±0.2% (full scale)	Singleended input	250 µs/ point	85Ω	Free-Run re-freshing	NX-AD4203
						Differential Input				NX-AD4204
			1/30000	0 to 30000	±0.1% (full scale)	Differential Input	10 µs/ point		Selectable Syn-chronous I/O re-freshing or Free-Run refreshing	NX-AD4208

Analog Output Units

Product Name	Specifications							Model
	Number of points	Input range	Resolution	Output setting value, decimal number (0 to 100%)	Over all accuracy (25°C)	Conversion time	I/O refreshing method	
Voltage Output Unit	2 points	-10 to +10V	1/8000	-4000 to 4000	±0.3% (full scale)	250 µs/ point	Free-Run refreshing	**NX-DA2603**
			1/30000	-15000 to 15000	±0.1% (full scale)	10 µs/ point	Selectable Synchronous I/O refreshing or Free-Run refreshing	**NX-DA2605**
	4 points		1/8000	-4000 to 4000	±0.3% (full scale)	250 µs/ point	Free-Run refreshing	**NX-DA3603**
			1/30000	-15000 to 15000	±0.1% (full scale)	10 µs/ point	Selectable Synchronous I/O refreshing or Free-Run refreshing	**NX-DA3605**
Current Output Unit	2 points	4 to 20mA	1/8000	0 to 8000	±0.3% (full scale)	250 µs/ point	Free-Run refreshing	**NX-DA2203**
			1/30000	0 to 30000	±0.1% (full scale)	10 µs/ point	Selectable Synchronous I/O refreshing or Free-Run refreshing	**NX-DA2205**
	4 points		1/8000	0 to 8000	±0.3% (full scale)	250 µs/ point	Free-Run refreshing	**NX-DA3203**
			1/30000	0 to 30000	±0.1% (full scale)	10 µs/ point	Selectable Synchronous I/O refreshing or Free-Run refreshing	**NX-DA3205**

Temperature Control Units

Product name	Specifications								Model
	Number of channels	Input type	Output	Number of output points	Number of CT input points	Control type	Conversion time	I/O refreshing method	
Advanced Temperature Control Unit	4	Universal input (themocouple, resistance thermometer, analog voltage, analog current)	Voltage output (for driving SSR)	4	4	Heating/ cooling control	50 ms	Free-Run refreshing	**NX-HTC3510-5**
			Linear current output						
	8		Voltage output (for driving SSR)	8	8	Standard control			**NX-HTC4505-5**
Temperature Control Unit 2-channel Type	2	Universal input (thermocouple, resistance thermometer)	Voltage output (for driving SSR)	2	2	Standard control			**NX-TC2405**
					None	Standard control			**NX-TC2406**
			Voltage output (for driving SSR)	4	None	Heating/ cooling control			**NX-TC2407**
			Linear current output	2	None	Standard control			**NX-TC2408**
Temperature Control Unit 4-channel Type	4		Voltage output (for driving SSR)	4	4	Standard control			**NX-TC3405**
					None	Standard control			**NX-TC3406**
			Voltage output (for driving SSR)	8	None	Heating/ cooling control			**NX-TC3407**
			Linear current output	4	None	Standard control			**NX-TC3408**

Temperature Input Units

Product Name	Specifications							Model
	Number of points	Input type	Resolution (25°C)	Over all accuracy (25°C)	Conversion time	I/O refreshing method	Terminals	
Thermocouple Input type	2	Thermocouple	0.1°C max. *1	For details, refer to your local OMRON website	250 ms/Unit	Free-Run refreshing	16 Terminals	**NX-TS2101**
	4						16 Terminals×2	**NX-TS3101**
	2		0.01°C max.		10 ms/Unit		16 Terminals	**NX-TS2102**
	4						16 Terminals×2	**NX-TS3102**
	2		0.001°C max.		60 ms/Unit		16 Terminals	**NX-TS2104**
	4						16 Terminals×2	**NX-TS3104**
Resistance Thermometer Input type	2	Resistance Thermometer (Pt100/Pt1000, three-wire) *2	0.1°C max.		250 ms/Unit		16 Terminals	**NX-TS2201**
	4						16 Terminals×2	**NX-TS3201**
	2		0.01°C max.		10 ms/Unit		16 Terminals	**NX-TS2202**
	4						16 Terminals×2	**NX-TS3202**
	2		0.001°C max.		60 ms/Unit		16 Terminals	**NX-TS2204**
	4						16 Terminals×2	**NX-TS3204**

*1. The resolution is 0.2°C max. when the input type is R, S, or W.
*2. The NX-TS2202 and NX-TS3202 only support Pt100 three-wire sensor.

Heater Burnout Detection Units

Product Name	Specifications							Model
	CT input section		Control output section					
	Number of inputs	Maximum heater current	Number of outputs	Internal I/O common	Maximum load current	Rated voltage	I/O refreshing method	
Heater Burnout Detection Unit	4	50 AAC	4	NPN	0.1 A/point, 0.4 A/Unit	12 to 24 VDC	Free-Run refreshing	**NX-HB3101**
				PNP		24 VDC		**NX-HB3201**

Load Cell Input Unit

Product Name	Specifications					Model
	Number of points	Conversion cycle	I/O refreshing method *1	Load cell excitation voltage	Input range	
Load Cell Input Unit	1	125 µs	• Free-Run refreshing • Synchronous I/O refreshing • Task period prioritized refreshing	5 VDC ± 10%	-5.0 to 5.0 mV/V	**NX-RS1201**

*1. Refer to the *NX-series Load Cell Input Unit User's Manual* (W565) for detailed information on I/O refresh cycle.

Position Interface: Incremental Encoder Input Units

Product Name	Specifications					Model
	Number of channels	External inputs	Maximum response frequency	I/O refreshing method	Number of I/O entry mappings	
Incremental Encoder Input Unit	1 (NPN)	3 (NPN)	500 kHz	Free-Run refreshing, Synchronous I/O refreshing	1/1	**NX-EC0112**
	1 (PNP)	3 (PNP)				**NX-EC0122**
	1	3 (NPN)	4 MHz			**NX-EC0132**
		3 (PNP)				**NX-EC0142**
	2 (NPN)	None	500 kHz		2/2	**NX-EC0212**
	2 (PNP)					**NX-EC0222**

Position Interface: SSI Input Units

Product Name	Specifications					Model
	Number of channels	Input/Output form	Maximum data length	Encoder power supply	Type of external connections	
SSI Input Unit	1	EIA standard RS-422-A	32 bits	24 VDC, 0.3 A/CH	Screwless push-in terminal block (12 terminals)	**NX-ECS112**
	2	EIA standard RS-422-A	32 bits	24 VDC, 0.3 A/CH	Screwless push-in terminal block (12 terminals)	**NX-ECS212**

Position Interface: Pulse Output Units

Product Name	Specifications							Model
	Number of channels *1	External inputs	External outputs	Maximum pulse output speed	I/O refreshing method	Number of I/O entry mappings	Control output interface	
Pulse Output Unit	1 (NPN)	2 (NPN)	1 (NPN)	500 kpps	Synchronous I/O refreshing, Task period prioritized refreshing *2	1/1	Open collector output	**NX-PG0112**
	1 (PNP)	2 (PNP)	1 (PNP)					**NX-PG0122**
	2	5 inputs/CH (NPN)	3 outputs/CH (NPN)	4 Mpps		2/2	Line driver output	**NX-PG0232-5**
		5 inputs/CH (PNP)	3 outputs/CH (PNP)					**NX-PG0242-5**
	4	5 inputs/CH (NPN)	3 outputs/CH (NPN)			4/4		**NX-PG0332-5**
		5 inputs/CH (PNP)	3 outputs/CH (PNP)					**NX-PG0342-5**

*1. This is the number of pulse output channels.
*2. Unit version 1.2 or later and an NX-ECC203 EtherCAT Coupler Unit are required.

EtherCAT Slave Unit

Product name	Specifications		Model
	Send/receive PDO data sizes *1	Refreshing method	
EtherCAT Slave Unit	• Data input by the EtherCAT master (TxPDOs) 1,204 bytes max. • Data output by the EtherCAT master (RxPDOs) 1,200 bytes max.	Free-Run Mode	**NX-ECT101**

*1. The following shows the contents of the TxPDO data.
- I/O data set from the CPU Unit to the EtherCAT master: 1,200 bytes or less
- Status to notify the EtherCAT master: 4 bytes or less

Communications Interface Units

Product Name	Serial interface	External connection terminal	Number of serial ports	Communications protocol	Model
Communications Interface Unit	RS-232C	Screwless Clamping Terminal Block	1 port	• No-protocol • Signal lines	**NX-CIF101**
	RS-422A/485				**NX-CIF105**
	RS-232C	D-Sub connector	2 ports		**NX-CIF210**

RFID Units

Product name	Amplifier/Antenna	No. of unit numbers used	Model
RFID Unit (1Ch)	V680 series	1	NX-V680C1
RFID Unit (2Ch)		2	NX-V680C2

IO-Link Master Unit

Product Name	Specifications			Model
	Number of IO-Link ports	I/O refreshing method	I/O connection terminals	
IO-Link Master Unit	4	Free-Run refreshing	Screwless clamping terminal block	NX-ILM400

System Units

Product Name	Specifications	Model
Additional NX Unit Power Supply Unit	Power supply voltage: 24 VDC (20.4 to 28.8 VDC) NX Bus power supply capacity: 10 W max.	NX-PD1000
Additional I/O Power Supply Unit	Power supply voltage: 5 to 24 VDC (4.5 to 28.8 VDC) I/O power feed maximum current: 4 A	NX-PF0630
	Power supply voltage: 5 to 24 VDC (4.5 to 28.8 VDC) I/O power feed maximum current: 10 A	NX-PF0730
I/O Power Supply Connection Unit	Number of I/O power terminals: IOG: 16 terminals Current capacity of I/O power terminal: 4 A/terminal max.	NX-PC0010
	Number of I/O power terminals: IOV: 16 terminals Current capacity of I/O power terminal: 4 A/terminal max.	NX-PC0020
	Number of I/O power terminals: IOV: 8 terminals, IOG: 8 terminals Current capacity of I/O power terminal: 4 A/terminal max	NX-PC0030
Shield Connection Unit	Number of shield terminals: 14 terminals (The lower two terminals are functional ground terminals.)	NX-TBX01

EtherCAT Coupler Units

You can use the NX Units via the EtherCAT Coupler Unit that is connected to the built-in EtherCAT port on the CPU Unit.

Product Name	Communications cycle in DC Mode	Current consumption	Maximum I/O power supply current	Model
EtherCAT Coupler Unit *1	250 to 4000 µs *2	1.45 W max.	4 A	**NX-ECC201**
	250 to 4000 µs *2		10 A	**NX-ECC202**
	125 to 10000 µs *2	1.25 W max.		**NX-ECC203**

*1. One End Cover NX-END01 is provided with the EtherCAT Coupler Unit.
*2. This depends on the specifications of the EtherCAT master. For example, the values are as follows when the EtherCAT Coupler Unit is connected to the built-in EtherCAT port on an NJ5-series CPU Unit: 500 µs, 1,000 µs, 2,000 µs, and 4,000 µs. Refer to the *NJ/NX-series CPU Unit Built-in EtherCAT Port User' Manual* (Cat. No. W505) for the specifications of the built-in EtherCAT ports on NJ/NX-series CPU Units. This also depends on the unit configuration.

EtherNet/IP Coupler Unit

Product name	Current consumption	Maximum I/O power supply current	Model
EtherNet/IP Coupler Unit *1	1.60 W or lower	10 A	**NX-EIC202**

*1. One End Cover NX-END01 is provided with the EtherCAT Coupler Unit.

Safety CPU Units

Appearance	Specifications					Model
	Maximum number of safety I/O points	Program capacity	Number of safety I/O connections	I/O refreshing method	Unit version	
	1,024	2,048 KB	128	Free-Run refreshing	Ver. 1.3 or later	**NX-SL5500**
	2,032	4,096 KB	254			**NX-SL5700**
	256	512 KB	32	Free-Run refreshing	Ver. 1.0 or later	**NX-SL3300**
	1,024	2,048 KB	128			**NX-SL3500**

Safety Input Units

Appearance	Specifications								Model
	Number of safety input points	Number of test output points	Internal I/O common	Rated input voltage	OMRON special safety input devices	Number of safety slave connections	I/O refreshing method	Unit version	
	4 points	2 points	Sinking inputs (PNP)	24 VDC	Can be connected.	1	Free-Run refreshing	Ver.1.1	**NX-SIH400**
	8 points	2 points	Sinking inputs (PNP)	24 VDC	Cannot be connected.	1	Free-Run refreshing	Ver.1.0	**NX-SID800**

Safety Output Units

Appearance	Specifications							Model
	Number of safety output points	Internal I/O common	Maximum load current	Rated voltage	Number of safety slave connections	I/O refreshing method	Unit version	
	2 points	Sourcing outputs (PNP)	2.0 A/point, 4.0 A/Unit at 40°C, and 2.5 A/Unit at 55°C The maximum load current depends on the installation orientation and ambient temperature.	24 VDC	1	Free-Run refreshing	Ver.1.0	**NX-SOH200**
	4 points	Sourcing outputs (PNP)	0.5 A/point and 2.0 A/Unit	24 VDC	1	Free-Run refreshing	Ver.1.0	**NX-SOD400**

Unit Power Supply System

Add one or more NX-PF Additional I/O Power Supply Units when I/O power is supplied from the NX bus to NX Units connected to the CPU Unit. Check the table below.

NX Units	Model	NX-PF Additional I/O Power Supply Unit required
Digital Input Units	NX-ID3317	Yes
	NX-ID3343	Yes
	NX-ID3344	Yes
	NX-ID3417	Yes
	NX-ID3443	Yes
	NX-ID3444	Yes
	NX-ID4342	Yes
	NX-ID4442	Yes
	NX-ID5342	Yes
	NX-ID5442	Yes
	NX-ID6342	Yes
	NX-ID6442	Yes
	NX-ID5142-1	No
	NX-ID5142-5	No
	NX-ID6142-5	No
	NX-ID6142-6	No
	NX-IA3117	No
Digital output Units	NX-OD2154	Yes
	NX-OD2258	Yes
	NX-OD3121	Yes
	NX-OD3153	Yes
	NX-OD3256	Yes
	NX-OD3257	Yes
	NX-OD3268	No
	NX-OD4121	Yes
	NX-OD4256	Yes
	NX-OD5121	Yes
	NX-OD5256	Yes
	NX-OD6121	Yes
	NX-OD6256	Yes
	NX-OD5121-1	No
	NX-OD5256-1	No
	NX-OD5121-5	No
	NX-OD5256-5	No
	NX-OD6121-5	No
	NX-OD6256-5	No
	NX-OD6121-6	No
	NX-OC2633	No
	NX-OC2733	No
	NX-OC4633	No
Digital Mixed I/O Units	NX-MD6121-5	No
	NX-MD6256-5	No
	NX-MD6121-6	No
High-speed Analog Input Units	NX-HAD401	Yes
	NX-HAD402	Yes
Analog Input Units	NX-AD2603	Yes
	NX-AD2604	No
	NX-AD2608	No
	NX-AD3603	Yes
	NX-AD3604	No
	NX-AD3608	No
	NX-AD4603	Yes
	NX-AD4604	No
	NX-AD4608	No
	NX-AD2203	Yes
	NX-AD2204	No
	NX-AD2208	No
	NX-AD3203	Yes
	NX-AD3204	No
	NX-AD3208	No
	NX-AD4203	Yes
	NX-AD4204	No
	NX-AD4208	No

NX Units	Model	NX-PF Additional I/O Power Supply Unit required
Analog Output Units	NX-DA2603	Yes
	NX-DA2605	Yes
	NX-DA3603	Yes
	NX-DA3605	Yes
	NX-DA2203	Yes
	NX-DA2205	Yes
	NX-DA3203	Yes
	NX-DA3205	Yes
Temperature Control Units	NX-TC2405	Yes
	NX-TC2406	Yes
	NX-TC2407	Yes
	NX-TC2408	Yes
	NX-TC3405	Yes
	NX-TC3406	Yes
	NX-TC3407	Yes
	NX-TC3408	Yes
Temperature Input Units	NX-TS2101	No
	NX-TS3101	No
	NX-TS2102	No
	NX-TS3102	No
	NX-TS2104	No
	NX-TS3104	No
	NX-TS2201	No
	NX-TS3201	No
	NX-TS2202	No
	NX-TS3202	No
	NX-TS2204	No
	NX-TS3204	No
Heater Burnout Detection Units	NX-HB3101	Yes
	NX-HB3201	Yes
Load Cell Input Unit	NX-RS1201	No
Position interface: Incremental Encoder Input Units	NX-EC0112	Yes
	NX-EC0122	Yes
	NX-EC0132	Yes
	NX-EC0142	Yes
	NX-EC0212	Yes
	NX-EC0222	Yes
Position interface: SSI Input Units	NX-ECS112	Yes
	NX-ECS212	Yes
Position interface: Pulse Output Units	NX-PG0112	Yes
	NX-PG0122	Yes
	NX-PG0232-5	No
	NX-PG0242-5	No
	NX-PG0332-5	No
	NX-PG0342-5	No
Communications Interface Units	NX-CIF101	No
	NX-CIF105	No
	NX-CIF210	No
RFID Units	NX-V680C1	Yes
	NX-V680C2	Yes
IO-Link Master Unit	NX-ILM400	Yes
Safety Input Units	NX-SIH400	Yes
	NX-SID800	Yes
Safety Output Units	NX-SOH200	Yes
	NX-SOD400	Yes

Note: Refer to the *NX-series NX102 CPU Unit Hardware User's Manual* (Cat. No. W593) for the NX Unit power supply system.

Automation Software Sysmac Studio

The Sysmac Studio is the software that provides an integrated environment for setting, programming, debugging and maintenance of machine automation controllers including the NJ/NX-series CPU Units, NY-series Industrial PC, EtherCAT Slave, and the HMI.

For details, refer to your local OMRON website and *Sysmac Studio Catalog* (Cat. No. P138).

Collection of software functional components Sysmac Library

Please download the Sysmac Library from the following URL and add it to the Sysmac Studio.
https://www.ia.omron.com/sysmac_library/

Typical Models

Product name	Features	Model
MQTT Communications Library *1	The MQTT communication library is a collection of software functional objects for exchanging Pub / Sub type messages through the MQTT server (MQTT broker).	**SYSMAC-XR020**
High-speed Analog Inspection Library	The High-speed Analog Inspection Library records analog input values acquired by the High-speed Analog Input Units in chronological order.	**SYSMAC-XR016**

*1. This Library is not available for NX102-□□20-DH (products equipped with time series data collection system).

Recommended EtherCAT and EtherNet/IP Communications Cables

Use Straight STP (shielded twisted-pair) cable of category 5 or higher with double shielding (braiding and aluminum foil tape) for EtherCAT. For EtherNet/IP, required specification for the communications cables varies depending on the baud rate.
For 100BASE-TX/10BASE-T, use an STP (shielded twisted-pair) cable of Ethernet category 5 or higher.
In the table, materials indicated available for EtherNet/IP 100BASE-TX are available for both of 100BASE-TX and 10BASE-T.

Cables with Connectors (For EtherCAT only)

Item	Appearance	Recommended manufacturer	Cable length (m)	Model
Cable with Connectors on Both Ends (RJ45/RJ45) Standard RJ45 plugs *1 Wire gauge and number of pairs: AWG26, 4-pair cable Cable sheath material: PUR Cable color: Yellow *2 EtherCAT/ EtherNet/IP (10BASE/100BASE/1000BASE *4)		OMRON	0.3	**XS6W-6PUR8SS30CM-YF**
			0.5	**XS6W-6PUR8SS50CM-YF**
			1	**XS6W-6PUR8SS100CM-YF**
			2	**XS6W-6PUR8SS200CM-YF**
			3	**XS6W-6PUR8SS300CM-YF**
			5	**XS6W-6PUR8SS500CM-YF**
Cable with Connectors on Both Ends (RJ45/RJ45) Rugged RJ45 plugs *1 Wire gauge and number of pairs: AWG22, 2-pair cable Cable color: Light blue EtherCAT/ EtherNet/IP (10BASE/100BASE)		OMRON	0.3	**XS5W-T421-AMD-K**
			0.5	**XS5W-T421-BMD-K**
			1	**XS5W-T421-CMD-K**
			2	**XS5W-T421-DMD-K**
			5	**XS5W-T421-GMD-K**
			10	**XS5W-T421-JMD-K**
Cable with Connectors on Both Ends (M12 Straight/M12 Straight) Shield strengthening connector cable *3 M12/Smartclick connectors Wire gauge and number of pairs: AWG22, 2-pair cable Cable color: Black EtherCAT/ EtherNet/IP (10BASE/100BASE)		OMRON	0.5	**XS5W-T421-BM2-SS**
			1	**XS5W-T421-CM2-SS**
			2	**XS5W-T421-DM2-SS**
			3	**XS5W-T421-EM2-SS**
			5	**XS5W-T421-GM2-SS**
			10	**XS5W-T421-JM2-SS**
Cable with Connectors on Both Ends (M12 Straight/RJ45) Shield strengthening connector cable *3 M12/Smartclick connector and rugged RJ45 plug Wire gauge and number of pairs: AWG22, 2-pair cable Cable color: Black EtherCAT/ EtherNet/IP (10BASE/100BASE)		OMRON	0.5	**XS5W-T421-BMC-SS**
			1	**XS5W-T421-CMC-SS**
			2	**XS5W-T421-DMC-SS**
			3	**XS5W-T421-EMC-SS**
			5	**XS5W-T421-GMC-SS**
			10	**XS5W-T421-JMC-SS**

*1. Cables with standard RJ45 plugs are available in the following lengths: 0.2 m, 0.3 m, 0.5 m, 1 m, 1.5 m, 2 m, 3 m, 5 m, 7.5 m, 10 m, 15 m, 20 m. Cables with rugged RJ45 plugs are available in the following lengths: 0.3 m, 0.5 m, 1 m, 2 m, 3 m, 5 m, 10 m, 15 m. For details, refer to the *Industrial Ethernet Connectors Catalog* (Cat. No. G019).
*2. Cables colors are available in yellow, green, and blue.
*3. For details, contact your OMRON representative.
*4. The products can be used only with the NX701/NX502.

Cables / Connectors (For EtherCAT or EtherNet/IP (100BASE-TX))

Wire Gauge and Number of Pairs: AWG24, 4-pair Cable

Item	Appearance	Recommended manufacturer	Model
Cables	---	Kuramo Electric Co.	KETH-SB *1
RJ45 Connectors	---	Panduit Corporation	MPS588-C *1

*1. We recommend you to use above cable and connector together.

Wire Gauge and Number of Pairs: AWG22, 2-pair Cable

Item	Appearance	Recommended manufacturer	Model
Cables	---	Kuramo Electric Co.	KETH-PSB-OMR *1
	---	JMACS Japan Co., Ltd.	PNET/B *1
RJ45 Assembly Connector		OMRON	XS6G-T421-1 *1

*1. We recommend you to use the above Cable and OMRON's RJ45 Assembly Connector together.
Note: Connect both ends of cable shielded wires to the connector hoods.

Optional Products/Maintenance Products/DIN Track Accessories

Product Name	Specification	Model
Memory Cards *1	SD memory card, 2 GB Memory Card is provided with the NX102-□□20.	HMC-SD292
	SDHC memory card, 4 GB	HMC-SD492
	SDHC memory card, 16 GB	HMC-SD1A2
Battery	Refer to the *Battery* page for details.	CJ1W-BAT01
End Cover	Must be connected to the right end of the CPU Rack. One End Cover is provided with the CPU Unit	NX-END02
DIN Tracks	Length: 0.5 m, Height: 7.3 mm	PFP-50N
	Length: 1 m, Height: 7.3 mm	PFP-100N
End Plate	There are 2 stoppers provided with CPU Units and I/O Interface Units as standard accessories to secure the Units on the DIN Track.	PFP-M
Unit/Terminal Block Coding Pins	For 10 Units (Terminal Block: 30 pins, Unit: 30 pins)	NX-AUX02
DIN Track Insulation Spacers	A Spacer to insulate the control panel from the DIN Track. To insulate the EtherCAT Slave Terminal from the control panel, use DIN Track Insulation Spacers.	NX-AUX01

*1. There are restrictions on the combination of CPU Unit version and memory card. Refer to NJ/NX-series CPU Unit Software User's Manual (W501) *8-5-2 Specifications of Supported SD Memory Cards, Folders, and Files* for details.

Electrical and Mechanical Specifications

Item		Specification
Model		NX102-□□□□
Enclosure		Mounted in a panel
Dimensions (mm) *1		72 × 100 × 90 mm (W×H×D)
Weight *2		390 g max.
Unit power supply	**Power supply voltage**	24 VDC (20.4 to 28.8 VDC)
	Unit power consumption *3	5.80 W max.
	Inrush current *4	For cold start at room temperature: 10 A max./0.1 ms max. and 2.5 A max./150 ms max.
	Current capacity of power supply terminal *5	4 A max.
	Isolation method	No isolation: between the Unit power supply terminal and internal circuit
Power supply to the NX Unit power supply	**NX Unit power supply capacity**	10 W max.
	NX Unit power supply efficiency	80%
	Isolation method	No isolation: between the Unit power supply terminal and NX Unit power supply
I/O Power Supply to NX Units		Not provided *6
External connection terminal	**Communication connector**	RJ45 for EtherNet/IP Communications × 2 RJ45 for EtherCAT Communications × 1
	Screwless clamping terminal block	For Unit power supply input and grounding (Removable)
	Output terminal (service supply)	Not provided
	RUN output terminal	Not provided
	NX bus connector	32 NX Units can be connected

*1. Includes the End Cover, and does not include projecting parts.
*2. Includes the End Cover. The weight of the End Cover is 82 g.
*3. Includes an SD Memory Card. The NX Unit power consumption to NX Units is not included.
*4. The inrush current that occurs when the supplied power is changed to ON from a continuous OFF state.
The inrush current may vary depending on the operating condition and other conditions. Therefore, select fuses, breakers, and external power supply devices that have enough margin in characteristic and capacity, considering the condition under which the devices are used.
In particular, in case when you insert a switch to turn ON/OFF the DC power supplied from an external power supply, if the duration of an ON-OFF-ON cycle is one second or less, the inrush control circuit may not function, which cause an inrush current of approximately 30 A/0.3 ms.
*5. The amount of current that can be passed constantly through the terminal. Do not exceed this current value when you use a through-wiring for the Unit power supply.
*6. When the type of the I/O power supply to NX Units you use is the supply from NX bus, an Additional I/O Power Supply Unit is required. Refer to *NX-series NX102 CPU Unit Hardware User's Manual* (W593) for details.

General Specifications

Item		Specification
Enclosure		Mounted in a panel
Grounding method		Ground to less than 100 Ω.
Operating environment	**Ambient operating temperature**	0 to 55°C
	Ambient operating humidity	10% to 95% (with no condensation)
	Atmosphere	Must be free from corrosive gases.
	Ambient storage temperature	-25 to 70°C (excluding battery)
	Altitude	2,000 m max.
	Pollution degree	2 or less: Meets IEC 61010-2-201.
	Noise immunity	2 kV on power supply line (Conforms to IEC 61000-4-4.)
	Overvoltage category	Category II: Meets IEC 61010-2-201.
	EMC immunity level	Zone B
	Vibration resistance	Conforms to IEC 60068-2-6. 5 to 8.4 Hz with 3.5-mm amplitude, 8.4 to 150 Hz, acceleration of 9.8 m/s^2 100 min each in X, Y, and Z directions (10 sweeps of 10 min each = 100 min total)
	Shock resistance	Conforms to IEC 60068-2-27. 147 m/s^2, 3 times in X, Y, and Z directions
Battery	**Life**	5 years (Power ON time rate 0% (power OFF))
	Model	CJ1W-BAT01 (sold separately)
Applicable standards *1		cULus, EU, UKCA, RCM, KC, NK, LR

*1. Refer to the OMRON website (http://www.ia.omron.com/) or consult your OMRON representative for the most recent applicable standards for each model.

Performance Specifications

Item				NX102-			
				12□□	11□□	10□□	90□□
Processing time	Instruction execution times	LD instruction		3.3 ns			
		Math instructions (for long real data)		70 ns or more			
Programming	Program capacity *1	Size		5 MB			
		Quantity	Number of POU definitions	3,000			
			Number of POU instances	9,000			
	Memory capacity for variables *2	Retain attribute	Size	1.5 MB			
			Number of variables	10,000			
		No Retain attribute	Size	32 MB			
			Number of variables	90,000			
	Data types	Number of data types		1,000			
	Memory for CJ-series Units (Can be specified with AT specifications for variables.)	CIO Area		0 to 6,144 words (CIO 0 to CIO 6,143) *3			
		Work Area		0 to 512 words (W0 to W511) *3			
		Holding Area		0 to 1,536 words (H0 to H1,535) *4			
		DM Area		0 to 32,768 words (D0 to D32,767) *4			
		EM Area		32,768 words × 25 banks (E0_0 to E18_32,767) *4 *5			
Motion control	Number of controlled axes *6	Maximum number of controlled axes		15 axes			4 axes
			Motion control axes	11 axes			---
			Single-axis position control axes	4 axes			
		Maximum number of used real axes		12 axes	8 axes	6 axes	4 axes
			Used motion control servo axes	8 axes	4 axes	2 axes	---
			Used single-axis position control servo axes	4 axes			
		Maximum number of axes for linear interpolation axis control		4 axes per axes group			---
		Number of axes for circular interpolation axis control		2 axes per axes group			---
	Maximum number of axes groups			8 axes groups			---
	Motion control period			The same control period as that is used for the process data communications cycle for EtherCAT.			
	Cams	Number of cam data points	Maximum points per cam table	65,535 points			
			Maximum points for all cam tables	262,140 points			
		Maximum number of cam tables		160 tables			
	Position units			Pulse, mm, μm, nm, degree, and inch			
	Override factors			0.00%, or 0.01% to 500.00%			

Item				NX102-			
				12□□	11□□	10□□	90□□
Built-in EtherNet/IP port	Number of ports			2			
	Physical layer			10BASE-T/100BASE-TX			
	Frame length			1,514 bytes max.			
	Media access method			CSMA/CD			
	Modulation			Baseband			
	Topology			Star			
	Baud rate			100 Mbps (100BASE-TX)			
	Transmission media			STP (shielded, twisted-pair) cable of Ethernet category 5, 5e or higher			
	Maximum transmission distance between Ethernet switch and node			100 m			
	Maximum number of cascade connections			There are no restrictions if an Ethernet switch is used.			
	CIP service: Tag data links (cyclic communications)	Maximum number of connections		32 per port 64 total			
		Packet interval *7		Can be set for each connection. 1 to 10,000 ms in 1-ms increments			
		Permissible communications band		12,000 pps *8 *9 (including heartbeat, CIP Safety routing)			
		Maximum number of tag sets		32 per port 40 total *10			
		Tag types		Network variables CIO/WR/HR/DM/EM			
		Number of tags per connection (i.e., per tag set)		8 (7 tags if Controller status is included in the tag set.)			
		Maximum number of tags		256 per port 512 total			
		Maximum link data size per node (total size for all tags)		19,200 bytes per port 38,400 bytes total			
		Maximum data size per connection		600 bytes			
		Maximum number of registrable tag sets		32 per port 40 total *10 (1 connection = 1 tag set)			
		Maximum tag set size		600 bytes (Two bytes are used if Controller status is included in the tag set.)			
		Multi-cast packet filter *11		Supported.			
	CIP message service: Explicit messages	Class 3 (number of connections)		32 per port 64 total (clients plus server)			
		UCMM (non-connection type)	Maximum number of clients that can communicate at one time	32 per port 64 total			
			Maximum number of servers that can communicate at one time	32 per port 64 total			
	CIP Safety routing	Maximum number of routable CIP Safety connections		16 total			
		Maximum routable safety data length per connection		32 bytes			
	Number of TCP sockets			60			
	Secure Socket Service	Maximum number of Secure Socket		60			
		TLS Version		1.2			

Item				NX102-			
				12□□	11□□	10□□	90□□
Built-in EtherNet/IP port	OPC UA Server	Support profile/Model		Embedded 2017 UA Server Profile PLCopen Information Model 1.00			
		Default Endpoint/Port		opc.tcp://192.168.250.1:4840/			
		Maximum number of sessions (Client)		5			
		Maximum number of Monitored Items per server		2,000			
		Sampling rate of Monitored Items (ms)		0, 50, 100, 250, 500, 1000, 2000, 5,000, 10,000 (If set to 0 (zero), it is assumed that is set to 50.)			
		Maximum number of Subscriptions per server		100			
		Maximum number of variables that can be published		10,000			
		Maximum number of structure definitions that can be published		100			
		Restrictions on variables unable to be published		• Variables whose size is over 60 KB • Two-dimensional or higher structure arrays (global variables) • Structures that include two-dimensional and higher arrays (global variables) • Structures with four or higher levels of nesting • Unions • Arrays whose index number suffix does no start from 0 • Arrays with 2,048 or more elements (global variables) • Structures with 100 or more members			
		SecurityPolicy/Mode		Select one of the following. None Sign - Basic128Rsa15 Sign - Basic256 Sign - Basic256Sha256 Sign - Aes128Sha256RsaOaep Sign - Aes256Sha256RsaPss SignAndEncrypt - Basic128Rsa15 SignAndEncrypt - Basic256 SignAndEncrypt - Basic256Sha256 SignAndEncrypt - Aes128Sha256RsaOaep SignAndEncrypt - Aes256Sha256RsaPss			
		Application Authentication	Authentication	X.509			
			Maximum number of storable certifications	Trusted certification: 32 Issuer certification: 32 Rejected certification: 32			
		User Authentication	Authentication	You can set the following items. User name/password/role *12 Anonymous			

Item			NX102-			
			12□□	11□□	10□□	90□□
Built-in EtherCAT port	Communications standard		IEC 61158 Type12			
	EtherCAT master specifications		Class B (Feature Pack Motion Control compliant)			
	Physical layer		100BASE-TX			
	Modulation		Baseband			
	Baud rate		100 Mbps (100BASE-TX)			
	Duplex mode		Auto			
	Topology		Line, daisy chain, branching and ring *13			
	Transmission media		Twisted-pair cable of category 5 or higher (double-shielded straight cable with aluminum tape and braiding)			
	Maximum transmission distance between nodes		100 m			
	Maximum number of slaves		64			
	Range of node addresses that can be set		1 to 192			
	Maximum process data size		Input: 5,736 bytes Output: 5,736 bytes *14			
	Maximum process data size per slave		Input: 1,434 bytes Output: 1,434 bytes			
	Communications cycle		1,000 to 32,000 µs (in 250-µs increments)			
	Sync jitter		1 µs max.			
Unit configuration	Units on CPU Rack	Maximum number of NX Units that can be mounted to the CPU Unit	32			
		Maximum I/O data size that can be allocated in the CPU Unit	Inputs: 8,192 bytes *15 Outputs: 8,192 bytes *15			
	Maximum number of NX Units for entire controller		432			
	Power supply	Model	A non-isolated power supply for DC input is built into the CPU Unit.			
		Power OFF detection time	2 to 8 ms			
Internal clock	Accuracy *16		At ambient temperature of 55°C: -3.0 to +2.0 min error per month At ambient temperature of 25°C: -2.0 to +2.0 min error per month At ambient temperature of 0°C: -3.0 to +2.0 min error per month			
	Retention time of built-in capacitor		At ambient temperature of 40°C: 10 days			

*1. Execution objects and variable tables (including variable names)
*2. Memory used for CJ-series Units is included.
*3. The value can be set in 1-word increments. The value is included in the total size of variables without a Retain attribute.
*4. The value can be set in 1-word increments. The value is included in the total size of variables with a Retain attribute.
*5. It is not possible to use the maximum number of words simultaneously for all banks, because the memory capacity for variables with a Retain attribute is limited to 1.5 MB.
*6. For terminology, refer to the *NJ/NX-series CPU Unit Motion Control User's Manual* (Cat. No. W507).
*7. Data will be refreshed at the set interval, regardless of the number of nodes.
*8. "pps" means packets per second, i.e., the number of communications packets that can be sent or received in one second.
*9. The allowable bandwidth varies depending on the RPI of the connection in use, the primary task period, and the number of ports simultaneously used for EtherNet/IP communications.
*10. When tag sets that exceed the total of 40 are set, a Number of Tag Sets for Tag Data Links Exceeded (840E0000 hex) occurs.
*11. As the EtherNet/IP port implements the IGMP client, unnecessary multi-cast packets can be filtered by using an Ethernet switch that supports IGMP Snooping.
*12. Roles can be set for the unit versions 1.64 or later of CPU Units.
*13. Ring topology is supported with the project version 1.40 or later.
Slaves on a ring topology should support a ring topology. If Omron slaves, please see the user's manual of slaves.
*14. For project unit version earlier than 1.40, the data must be within four frames.
*15. You can check the I/O allocation status with the Sysmac Studio. Refer to the *NJ/NX-series CPU Unit Software User's Manual* (Cat. No. W501) for how to check the I/O allocation status. Also, refer to the relevant manuals for specific Units for the maximum I/O data size per NX Unit.
*16. The values shown are values in continuous operation.

Function Specifications

Item				NX102
Tasks	Function			I/O refreshing and the user program are executed in units that are called tasks. Tasks are used to specify execution conditions and execution priority.
		Periodically executed tasks	Maximum number of primary periodic tasks	1
			Maximum number of periodic tasks	2
		Conditionally executed tasks	Maximum number of event tasks	32
			Execution condition	When Activate Event Task instruction is executed or when condition expression for variable is met
Programming	POU (Program Organization Unit)	Programs		POUs that are assigned to tasks
		Function blocks		POUs that are used to create objects with specific conditions
		Functions		POUs that are used to create objects that determine unique outputs for the inputs, such as for data processing
	Programming languages	Types		Ladder diagrams *1 and structured text (ST)
	Namespaces			A concept that is used to group identifiers for POU definitions
	Variables	External access of variables	Network variables	The function which allows access from the HMI, host computers, or other controllers
	Data types	Basic data types	Boolean	BOOL
			Bit strings	BYTE, WORD, DWORD, LWORD
			Integers	INT, SINT, DINT, LINT, UINT, USINT, UDINT, ULINT
			Real numbers	REAL, LREAL
			Durations	TIME
			Dates	DATE
			Times of day	TIME_OF_DAY
			Date and time	DATE_AND_TIME
			Text strings	STRING
		Derivative data types		Structures, unions, enumerations
		Structures	Function	A derivative data type that groups together data with different variable types
			Maximum number of members	2,048
			Nesting maximum levels	8
			Member data types	Basic data types, structures, unions, enumerations, array variables
			Specifying member offsets	You can use member offsets to place structure members at any memory locations
		Unions	Function	A derivative data type that enables access to the same data with different data types
			Maximum number of members	4
			Member data types	BOOL, BYTE, WORD, DWORD, LWORD
		Enumerations	Function	A derivative data type that uses text strings called enumerators to express variable values
	Data type attributes	Array specifications	Function	An array is a group of elements with the same data type. You specify the number (subscript) of the element from the first element to specify the element
			Maximum number of dimensions	3
			Maximum number of elements	65,535
			Array specifications for FB instances	Supported
		Range specifications		You can specify a range for a data type in advance. The data type can take only values that are in the specified range
	Libraries			User libraries
Motion control	Control modes			Position control, velocity control, torque control
	Axis types			Servo axes, virtual servo axes, encoder axes, virtual encoder axes, PTP axes
	Positions that can be managed			Command positions and actual positions

Item				NX102
Motion control	Single axes	Single-axis position control	Absolute positioning	Positioning is performed for a target position that is specified with an absolute value
			Relative positioning	Positioning is performed for a specified travel distance from the command current position
			Interrupt feeding	Positioning is performed for a specified travel distance from the position where an interrupt input was received from an external input
			Cyclic synchronous absolute positioning	A positioning command is output each control period in Position Control Mode
		Single-axis velocity control	Velocity control	Velocity control is performed in Position Control Mode
			Cyclic synchronous velocity control	A velocity command is output each control period in Velocity Control Mode
		Single-axis torque control	Torque control	The torque of the motor is controlled
		Single-axis synchronized control	Starting cam operation	A cam motion is performed using the specified cam table
			Ending cam operation	The cam motion for the axis that is specified with the input parameter is ended
			Starting gear operation	A gear motion with the specified gear ratio is performed between a master axis and slave axis
			Positioning gear operation	A gear motion with the specified gear ratio and sync position is performed between a master axis and slave axis
			Ending gear operation	The specified gear motion or positioning gear motion is ended
			Synchronous positioning	Positioning is performed in sync with a specified master axis
			Master axis phase shift	The phase of a master axis in synchronized control is shifted
			Combining axes	The command positions of two axes are added or subtracted and the result is output as the command position
		Single-axis manual operation	Powering the Servo	The Servo in the Servo Drive is turned ON to enable axis motion
			Jogging	An axis is jogged at a specified target velocity
		Auxiliary functions for single-axis control	Resetting axis errors	Axes errors are cleared
			Homing	A motor is operated and the limit signals, home proximity signal, and home signal are used to define home
			Homing with parameter	The parameters are specified, the motor is operated, and the limit signals, home proximity signal, and home signal are used to define home
			High-speed homing	Positioning is performed for an absolute target position of 0 to return to home
			Stopping	An axis is decelerated to a stop
			Immediately stopping	An axis is stopped immediately
			Setting override factors	The target velocity of an axis can be changed
			Changing the current position	The command current position or actual current position of an axis can be changed to any position.
			Enabling external latches	The position of an axis is recorded when a trigger occurs
			Disabling external latches	The current latch is disabled
			Zone monitoring	You can monitor the command position or actual position of an axis to see when it is within a specified range (zone)
			Enabling digital cam switches	You can turn a digital output ON and OFF according to the position of an axis
			Monitoring axis following error	You can monitor whether the difference between the command positions or actual positions of two specified axes exceeds a threshold value
			Resetting the following error	The error between the command current position and actual current position is set to 0
			Torque limit	The torque control function of the Servo Drive can be enabled or disabled and the torque limits can be set to control the output torque
			Slave Axis Position Compensation	This function compensates the position of the slave axis currently in synchronized control.
			Cam monitor	Outputs the specified offset position for the slave axis in synchronous control.
			Start velocity	You can set the initial velocity when axis motion starts
	Axes groups	Multi-axes coordinated control	Absolute linear interpolation	Linear interpolation is performed to a specified absolute position
			Relative linear interpolation	Linear interpolation is performed to a specified relative position
			Circular 2D interpolation	Circular interpolation is performed for two axes
			Axes group cyclic synchronous absolute positioning	A positioning command is output each control period in Position Control Mode

Item				NX102
Motion control	Axes groups	Auxiliary functions for multi-axes coordinated control	Resetting axes group errors	Axes group errors and axis errors are cleared
			Enabling axes groups	Motion of an axes group is enabled
			Disabling axes groups	Motion of an axes group is disabled
			Stopping axes groups	All axes in interpolated motion are decelerated to a stop
			Immediately stopping axes groups	All axes in interpolated motion are stopped immediately
			Setting axes group override factors	The blended target velocity is changed during interpolated motion
			Reading axes group positions	The command current positions and actual current positions of an axes group can be read
			Changing the axes in an axes group	The Composition Axes parameter in the axes group parameters can be overwritten temporarily
	Common items	Cams	Setting cam table properties	The end point index of the cam table that is specified in the input parameter is changed
			Saving cam tables	The cam table that is specified with the input parameter is saved in non-volatile memory in the CPU Unit
			Generating cam tables	The cam table is generated from the cam property and cam node that is specified in input parameters
		Parameters	Writing MC settings	Some of the axis parameters or axes group parameters are overwritten temporarily
			Changing axis parameters	The axis parameters can be accessed or changed from the user program
	Auxiliary functions	Count modes		You can select either Linear Mode (finite length) or Rotary Mode (infinite length).
		Unit conversions		You can set the display unit for each axis according to the machine
		Acceleration/ deceleration control	Automatic acceleration/ deceleration control	Jerk is set for the acceleration/deceleration curve for an axis motion or axes group motion
			Changing the acceleration and deceleration rates	You can change the acceleration or deceleration rate even during acceleration or deceleration
		In-position check		You can set an in-position range and in-position check time to confirm when positioning is completed
		Stop method		You can set the stop method to the immediate stop input signal or limit input signal
		Re-execution of motion control instructions		You can change the input variables for a motion control instruction during execution and execute the instruction again to change the target values during operation
		Multi-execution of motion control instructions (Buffer Mode)		You can specify when to start execution and how to connect the velocities between operations when another motion control instruction is executed during operation
		Continuous axes group motions (Transition Mode)		You can specify the Transition Mode for multi-execution of instructions for axes group operation
		Monitoring functions	Software limits	The movement range of an axis is monitored
			Following error	The error between the command current value and the actual current value is monitored for each axis
			Velocity, acceleration rate, deceleration rate, torque, interpolation velocity, interpolation acceleration rate, interpolation deceleration rate	You can set and monitor warning values for each axis and each axes group
		Absolute encoder support		You can use an OMRON 1S-series Servomotor or G5-series Servomotor with an Absolute Encoder to eliminate the need to perform homing at startup
		Input signal logic inversion		You can inverse the logic of immediate stop input signal, positive limit input signal, negative limit input signal, or home proximity input signal
	External interface signals			The Servo Drive input signals listed below are used. Home signal, home proximity signal, positive limit signal, negative limit signal, immediate stop signal, interrupt input signal
Unit (I/O) management	EtherCAT slaves	Maximum number of slaves		64
Communications	Secure Communications			Function for secure communication with support software
	Built-in EtherNet/IP port	Communications protocol		TCP/IP, UDP/IP
		TCP/IP functions	CIDR	The function which performs IP address allocations without using a class (class A to C) of IP address
			IP Forwarding	The function which forwards IP packets between interfaces
			Packet Filter	The function which checks the IP packet to determine whether to receive and send it based on the source IP address and TCP port number

Item				NX102
Communications	Built-in EtherNet/IP port	CIP communications service	Tag data links	Programless cyclic data exchange is performed with the devices on the EtherNet/IP network
			Message communications	CIP commands are sent to or received from the devices on the EtherNet/IP network
			CIP Safety routing	Routing function for CIP Safety on the EtherNet/IP network. The endpoint of CIP Safety is NX-SL5□00 in the system
		TCP/IP applications	Socket services	Data is sent to and received from any node on Ethernet using the UDP or TCP protocol. Socket communications instructions are used
			Secure Socket service (Client)	Establishes a TLS session with the TCP protocol, and sends and receives arbitrary data to and from the server and any node on the Ethernet using instructions for secure socket communication
			FTP client	Files are transferred via FTP from the CPU Unit to computers or controllers at other Ethernet nodes. FTP client communications instructions are used
			FTP server	Files can be read from or written to the SD Memory Card in the CPU Unit from computers at other Ethernet nodes
			Automatic clock adjustment	Clock information is read from the NTP server at the specified time or at a specified interval after the power supply to the CPU Unit is turned ON. The internal clock time in the CPU Unit is updated with the read time
			SNMP agent	Built-in EtherNet/IP port internal status information is provided to network management software that uses an SNMP manager
		OPC UA	Server function	The function to respond to requests from clients on the OPC UA network
	EtherCAT port	Supported services	Process data communications	A communications method to exchange control information in cyclic communications between the EtherCAT master and slaves. This communications method is defined by CoE
			SDO communications	A communications method to exchange control information in noncyclic event communications between EtherCAT master and slaves. This communications method is defined by CoE
		Network scanning		Information is read from connected slave devices and the slave configuration is automatically generated
		DC (Distributed Clock)		Time is synchronized by sharing the EtherCAT system time among all EtherCAT devices (including the master)
		Enable/disable settings for slaves		The slaves can be enabled or disabled as communications targets
		Disconnecting/connecting slaves		Temporarily disconnects a slave from the EtherCAT network for maintenance, such as for replacement of the slave, and then connects the slave again
		Supported application protocol	CoE	SDO messages of the CAN application can be sent to slaves via EtherCAT
	Communications instructions			CIP communications instructions, socket communications instructions, SDO message instructions, no-protocol communications instructions, FTP client instructions, Modbus RTU protcol instructions, Modbus TCP protcol instructions
System management	Event logs	Function		Events are recorded in the logs
		Maximum number of events	System event log	768 *2 [containing] • For CPU Unit: 512 • For NX Unit without MPU: 256
			Access event log	576 [containing] • For CPU Unit: 512 • For NX Unit without MPU: 64
			User-defined event log	512
Debugging	Online editing	Single		Programs, function blocks, functions, and global variables can be changed online. More than one operators can change POUs individually via network
	Forced refreshing			The user can force specific variables to TRUE or FALSE
		Maximum number of forced variables	Device variables for EtherCAT slaves	64
	MC Test Run			Motor operation and wiring can be checked from the Sysmac Studio
	Synchronizing			The project file in the Sysmac Studio and the data in the CPU Unit can be made the same when online
	Differential monitoring			You can monitor when a variable changes to TRUE or changes to FALSE
		Maximum number of monitored variables		8

Item				NX102
Debugging	Data tracing	Types	Single triggered trace	When the trigger condition is met, the specified number of samples are taken and then tracing stops automatically
			Continuous trace	Data tracing is executed continuously and the trace data is collected by the Sysmac Studio
		Maximum number of simultaneous data traces		2
		Maximum number of records		10,000
		Sampling	Maximum number of sampled variables	48
		Timing of sampling		Sampling is performed for the specified task period, at the specified time, or when a sampling instruction is executed
		Triggered traces		Trigger conditions are set to record data before and after an event
			Trigger conditions	• When BOOL variable changes to TRUE or FALSE • Comparison of non-BOOL variable with a constant. Comparison method: Equals (=), Greater than (>), Greater than or equals (≥), Less than (<), Less than or equals (≤), Not equal (≠)
			Delay	You can set the percentage of sampling before and after the trigger condition is met
	Safety data logging	Function		Records variables used in the safety program of the Safety CPU Unit in a chronological order
		Targets	Target Safety CPU Unit	NX-SL5□00 *3
			Target variable types	Exposed variables and device variables used in the safety program
			Maximum number of logged variables	100
			Data types	SAFEBOOL, SAFEBYTE, SAFEWORD, SAFEINT, SAFEDINT,BOOL, BYTE, WORD, INT, DINT
			Maximum logging time	480 s (Depends on logging interval)
			Logging interval	Select from minimum value which stores from primary periodic task cycle or adds constant number multiple (x1, x2, x3, x4) of primary periodic task cycle *4
		Maximum number of simultaneous executions		2
	Simulation			The operation of the CPU Unit is emulated in the Sysmac Studio
Reliability functions	Self-diagnosis	Controller errors	Levels	Major faults, partial faults, minor faults, observation, information
		User-defined errors		User-defined errors are registered in advance and then records are created by executing instructions
			Levels	8
Security	Protecting software assets and preventing operating mistakes	CPU Unit names and serial IDs		When going online to a CPU Unit from the Sysmac Studio, the CPU Unit name in the project is compared to the name of the CPU Unit being connected to
		Protection	User program transfer with no restoration information	You can prevent reading data in the CPU Unit from the Sysmac Studio
			CPU Unit write protection	You can prevent writing data to the CPU Unit from the Sysmac Studio or SD Memory Card
			Overall project file protection	You can use passwords to protect .smc files from unauthorized opening on the Sysmac Studio
			Data protection	You can use passwords to protect POUs on the Sysmac Studio
		Verification of operation authority		Online operations can be restricted by operation rights to prevent damage to equipment or injuries that may be caused by operating mistakes
			Number of groups	5
		User Authentication		This function authenticates each user when Sysmac Studio is going online with the Controller and restricts operation according to the user's privileges.
			Number of groups	5
		Verification of user program execution ID		The user program cannot be executed without entering a user program execution ID from the Sysmac Studio for the specific hardware (CPU Unit)
SD Memory Card functions	Storage type			SD Memory Card, SDHC Memory Card
	Application	Automatic transfer from SD Memory Card		When the power supply to the controller is turned ON, the data that is stored in the autoload directory of the SD Memory Card is transferred to the controller
		Program transfer from SD Memory Card		With the specification of the system-defined variable, you can transfer a program that is stored in the SD Memory Card to the controller
		SD Memory Card operation instructions		You can access SD Memory Cards from instructions in the user program
		File operations from the Sysmac Studio		You can perform file operations for controller files in the SD Memory Card and read/write standard document files on the computer
		SD Memory Card life expiration detection		Notification of the expiration of the life of the SD Memory Card is provided in a system-defined variable and event log

Item				NX102
Backing up data	SD Memory Card backups	Operating methods	CPU Unit front-panel DIP switch	You can perform backup, verification, and restoration operations by manipulating the front-panel DIP switch on the CPU Unit
			Specification with system-defined variables	You can perform backup, verification, and restoration operations by manipulating system-defined variables
			SD Memory Card Window in Sysmac Studio	Backup and verification operations are performed from the SD Memory Card Window of the Sysmac Studio
			Special instruction	The special instruction is used to backup data
		Protection	Disabling backups to SD Memory Cards	Backing up data to a SD Memory Card is prohibited
	Safety Unit Restore from SD Memory Card			Restores the data of the Safety CPU Unit using the front-panel DIP switch on the Safety CPU Unit and SD Memory Card
	Sysmac Studio Controller backups			The Sysmac Studio is used to backup, restore, or verify controller data

*1. Inline ST is supported. (Inline ST is ST that is written as an element in a ladder diagram.)
*2. Up to 512 system logs for events in the CPU Unit and 256 system logs in the NX Unit can be recorded.
*3. When connected to a CPU rack.
*4. Minimum value fulfills all these conditions.
- Larger than 5 ms
- Constant number multiple of primary periodic task cycle

Function Specifications of the Database Connection CPU Units

Besides functions of the NX102-□□□□, functions supported by the NX102-□□20 are as follows.

Item			Description			
			NX102-1220	NX102-1120	NX102-1020	NX102-9020
Supported port			Built-in EtherNet/IP port			
Supported DB versions *1 *2	SQL Server by Microsoft		2012/2014/2016/2017/2019/2022			
	Oracle Database by Oracle		11g/12c/18c/19c/21c/23ai (23c)			
	DB2 for Linux, UNIX and Windows by IBM		9.7/10.1/10.5/11.1			
	MySQL Community Edition by Oracle*3		5.6/5.7/8.0			
	Firebird by Firebird Foundation		2.5			
	PostgreSQL by PostgreSQL Global Development Group		9.4/9.5/9.6/10/11/12/13/14/15/16			
Number of DB Connections (Number of databases that can be connected at the same time)			2*4 *5			
Instruction	Supported operations		The following operations can be performed by executing DB Connection Instructions in the CPU Units: Inserting records (INSERT), Updating records (UPDATE), Retrieving records (SELECT), Deleting records (DELETE), Execute Stored Procedure*6, and Execute Batch Insert*6			
	Max. number of instructions for simultaneous execution		32			
	Max. number of columns in an INSERT operation		SQL Server: 1,024 Oracle: 1,000 DB2: 1,000 MySQL: 1,000 Firebird: 1,000 PostgreSQL: 1,000			
	Max. number of columns in an UPDATE operation		SQL Server: 1,024 Oracle: 1,000 DB2: 1,000 MySQL: 1,000 Firebird: 1,000 PostgreSQL: 1,000			
	Max. number of columns in a SELECT operation		SQL Server: 1,024 Oracle: 1,000 DB2: 1,000 MySQL: 1,000 Firebird: 1,000 PostgreSQL: 1,000			
	Max. number of records in the output of a SELECT operation		65,535 elements, 4 MB			
	Stored procedure call *6	Supported databases	• SQL Server • Oracle Database • MySQL Community Edition • PostgreSQL			
		Argument (Sum of IN, OUT and INOUT)	Up to 256 variables*7			
		Return value	One variable			
		Result set	Supported			
		Spool function	Not supported			
	Batch insert execution *6	Supported databases	• SQL Server • Oracle Database • MySQL Community Edition • PostgreSQL			
		Supported data size	Less than 1,000 columns and upper limit (8 MB) of structure variable size or less*8			
		Spool function	Not supported			
	Max. number of DB Map Variables for which a mapping can be connected*9		SQL Server: 30*10 Oracle: 20*10 DB2: 20*10 MySQL: 20*10 Firebird: 15 PostgreSQL: 20*10			
Run mode of the DB Connection Service			Operation Mode or Test Mode • Operation Mode: When each instruction is executed, the service actually accesses the DB • Test Mode: When each instruction is executed, the service ends the instruction normally without accessing the DB actually			
Spool function			Used to store SQL statements when an error occurred and resend the statements when the communications are recovered from the error			
	Spool capacity*11		192 KB			
Operation Log function			The following three types of logs can be recorded: • Execution Log: Log for tracing the executions of the DB Connection Service • Debug Log: Detailed log for SQL statement executions of the DB Connection Service • SQL Execution Failure Log: Log for execution failures of SQL statements in the DB			
DB Connection Service Shutdown function			Used to shut down the DB Connection Service after automatically saving the operation log files into the SD Memory Card			
Encrypted Communication	Supported databases		• SQL Server • Oracle Database • MySQL Community Edition • PostgreSQL			
	TLS Ver.		TLS 1.2			

✻1. SQL Server 2014, Oracle Database 12c and PostgreSQL 9.4 are supported by the DB Connection Service Version 1.02 or higher.
SQL Server 2016, MySQL 5.7, DB2 11.1 and PostgreSQL 9.5/9.6 are supported by the DB Connection Service Version 1.03 or higher.
SQL Server 2017 is supported by the DB Connection Service Version 1.04 or higher.
Oracle Database 18c, MySQL Community Edition 8.0 and PostgreSQL 10 are supported by the DB Connection Service Version 2.00 or higher.
You cannot use Oracle 10g with the DB Connection Service version 2.00 or higher.
SQL Server 2019, Oracle Database 19c and PostgreSQL 11/12/13 are supported by the DB Connection Service Version 2.01 or higher.
SQL Server 2022, Oracle Database 21c/23ai (23c) and PostgreSQL 14/15/16 are supported by the DB Connection Service Version 2.04 or higher.
✻2. Connection to the DB on the cloud is not supported.
✻3. The supported storage engines of the DB are InnoDB and MyISAM.
✻4. When two or more DB Connections are established, the operation cannot be guaranteed if you set different database types for the connections.
✻5. For the DB Connection Service Version lower than 1.04, Number of DB Connection is 1.
✻6. The function is available for the DB Connection Service Version 2.00 or higher.
✻7. Depends on members of a structure.
✻8. Constrained by the memory capacity for variables. See the specifications for the memory capacity for variables.
✻9. Even if the number of DB Map Variables has not reached the upper limit, the maximum total number of members of structures used as data type of DB Map Variables is 10,000.
✻10. For DB Connection Service Version lower than 1.04, Max. number of DB Map Variables for which a mapping can be connected is 15.
✻11. Refer to the *NJ/NX-series Database Connection CPU Units User's Manual* (Cat. No. W527) for the information.

Note: The extended support for databases has ended for the following DB versions.
Please consider replacing the current database with a new version.

Item	Discription
Microsoft Corporation: SQL Server	2008/2008R2
Oracle Corporation: Oracle Database	10g
Oracle Corporation: MySQL Community Edition	5.1/5.5
International Business Machines Corporation (IBM): DB2 for Linux, UNIX and Windows	9.5
Firebird Foundation Incorporated: Firebird	2.1
The PostgreSQL Global Development Group: PostgreSQL	9.2/9.3

Part Names and Functions

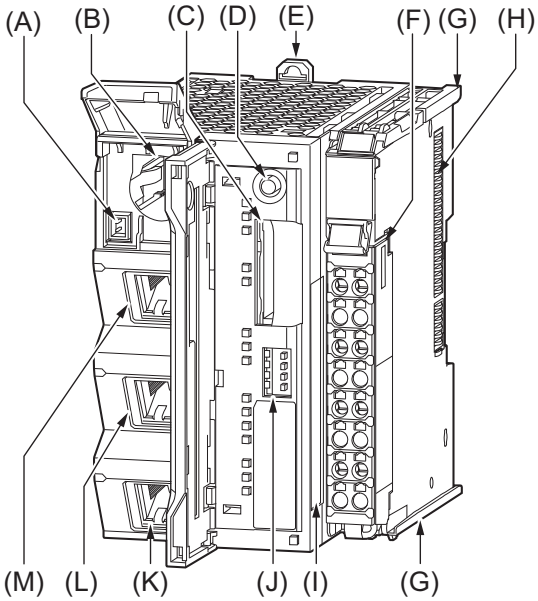

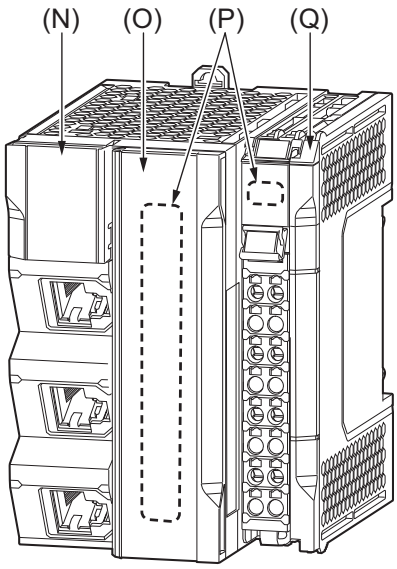

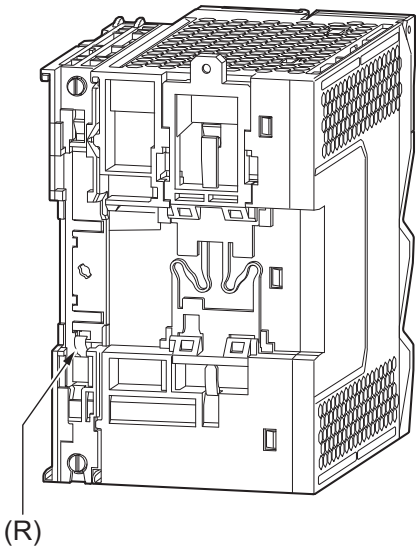

Letter	Name	Function
A	Battery connector	Connects a separately-sold backup battery to the CPU Unit.
B	Battery slot	Allows a separately-sold backup battery to be mounted into the CPU Unit.
C	SD Memory Card connector	Connects the SD Memory Card to the CPU Unit.
D	SD Memory Card power supply switch	Turns OFF the power supply so that you can remove the SD Memory Card. *NX-series NX102 CPU Unit Hardware User's Manual (W593)*
E	DIN Track mounting hook	This hook is used to mount the NX Unit to a DIN Track.
F	Terminal block	The terminal block is used for wiring for the Unit power supply and grounding cable.
G	Unit hookup guides	These guides are used to mount an NX Unit or the End Cover.
H	NX bus connector	This connector is used to connect the NX Unit mounted on the right side.
I	ID information indication	Shows the ID information of the CPU Unit.
J	DIP switch	Used in Safe Mode*1 or when backing up data*2. Normally, turn OFF all of the pins.
K	Built-in EtherCAT port (port 3)	Connects the built-in EtherCAT with an Ethernet cable.
L	Built-in EtherNet/IP port (port 2)	Connects the built-in EtherNet/IP with an Ethernet cable. Use port 1 to perform OPC UA communications.
M	Built-in EtherNet/IP port (port 1)	
N	Battery cover	A cover for the battery slot. It opens upward.
O	SD Memory Card	A cover for the SD Memory Card and the DIP switch. It opens toward the left.
P	Operation Status Indicators	Shows the operation status of the CPU Unit by multiple indicators.

Letter	Name	Function
Q	End Cover	A cover to protect the NX Unit and CPU Unit. One End Cover is provided with the CPU Unit.
R	DIN Track contact plate	This plate is used to contact the functional ground terminal with a DIN Track.

*1. To use Safe Mode, set the DIP switch as shown below and then turn ON the power supply to the Controller.

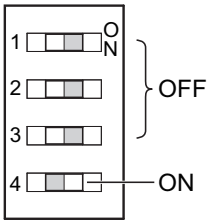

If the power supply to the Controller is turned ON with the CPU Unit in Safe Mode, the CPU Unit will start in PROGRAM mode. Use the Safe Mode if you do not want to execute the user program when the power supply is turned ON or if it is difficult to connect the Sysmac Studio. For information on Safe Mode, refer to the *NJ/NX-series Troubleshooting Manual* (Cat. No. W503).

*2. Refer to the *NJ/NX-series CPU Unit Software User's Manual* (Cat. No. W501) for details on backing up data.

NX Unit Configuration

CPU Rack

The CPU Rack consists of an NX-series NX102 CPU Unit, NX Units, and an End Cover.
Up to 32 NX Units can be connected.

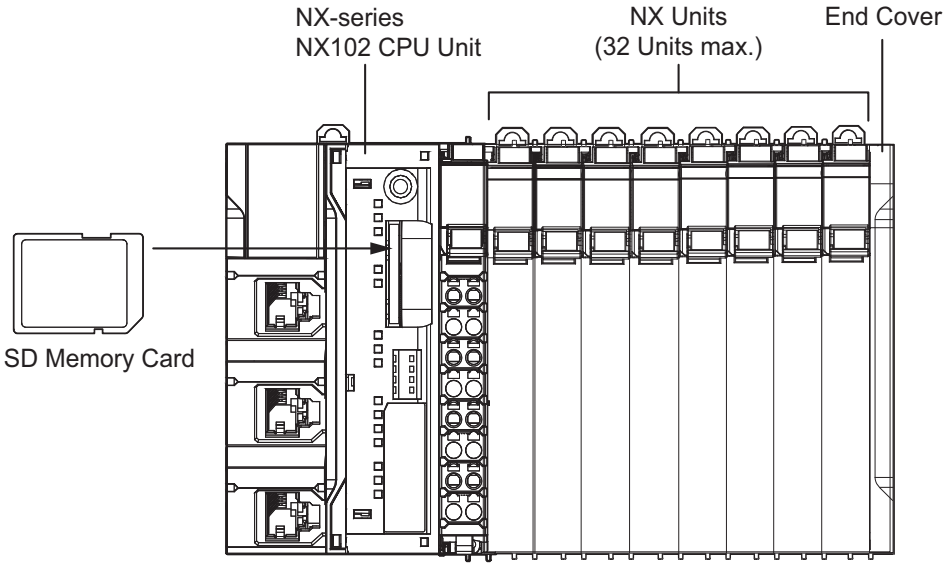

Series	Configuration		Remarks
NX-series	NX-series NX102 CPU Unit		One required for every CPU Rack.
	End Cover		Must be connected to the right end of the CPU Rack. One End Cover is provided with the CPU Unit.
	NX Units	Digital I/O Unit	Up to 32 Units can be mounted to each CPU Rack. Refer to *NX-series NX102 CPU Unit Hardware User's Manual* (W593) for information such as restrictions on the NX Units. For information on the most recent lineup of NX Units, refer to NX-series catalogs or OMRON websites, or ask your OMRON representative.
		Analog I/O Unit	
		System Unit	
		Position Interface Unit	
		Communication Interface Unit	
		Load Cell Input Unit	
NJ/NX-series	SD Memory Card		Install as required.

Battery

The battery is not mounted when the product is shipped.
To turn OFF the power supply to the equipment for a certain period of time by using the clock data for programming, event logs, etc., you need a separately-sold battery to retain the clock data.
The following describes the purpose of the battery mounting, the battery model, and the battery-related error detection and clock data settings.

Purpose of the Battery Mounting

The battery is used to retain the clock data while the power is not supplied to the CPU Unit. The clock data is retained by the built-in capacitor whether the battery is mounted or not, but the retention period depends on the continuous power-ON time of the CPU Unit, as shown below.

Continuous power-ON time of CPU Unit *1	Retention period during no power supply at an ambient temperature of 40°C
100 hours	Approx. 10 days
8 hour	Approx. 8 days
1 hour	Approx. 7 days

*1. This is equivalent to the time to charge a built-in capacitor in which no electric charge is accumulated.

When you use the clock data for programming, use a battery if you cannot ensure the continuous power-ON time shown above or the power-OFF time is longer than the above power-ON time.

The following data (other than the clock data) is retained in the built-in non-volatile memory, so they are not lost even if the battery and built-in capacitor are fully discharged.
- User program
- Set values
- Variables retained during power interruption
- Event logs

Battery Model

The table below shows the model and specifications of the battery that can be used.

Model	Appearance	Specification
CJ1W-BAT01	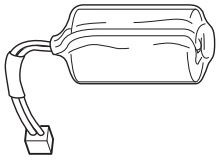	Service life: 5 years For the battery lifetime, refer to *NX-series NX102 CPU Unit Hardware User's Manual (W593)*. The clock information is retained during power interruptions.

Sysmac Studio

Connection

With an NX102 CPU Unit, you can connect the Sysmac Studio online in the following ways.

Configuration

Connection with EtherNet/IP

- 1: 1 Connection

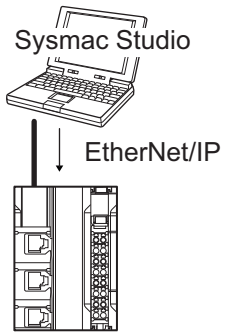

- A direct connection is made from the Sysmac Studio. The IP address and connection device do not need to be specified. *1
- You can make the connection whether or not an Ethernet switch is used.
- Support for Auto-MDI enables the use of cross cables or straight cables if a direct connection is made.
- 1: 1 connection is possible only for the built-in EtherNet/IP port 1.

- 1: N Connection

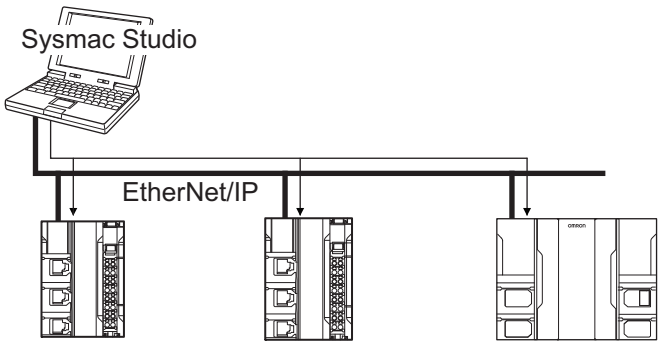

Directly specify the IP address of the remote device.

*1. With the NX102 CPU Unit, this is possible only when you connect the Unit to the built-in EtherNet/IP port (port 1).

Version Information

Unit Versions and Corresponding Sysmac Studio Versions

Refer to *NX-series NX102 CPU Unit Hardware User's Manual* (W593).

Unit Versions, DB Connection Service Versions and Sysmac Studio Versions (Database Connection CPU Units)

Refer to *NJ/NX-series Database Connection CPU Units User's Manual* (W527).

Dimensions

(Unit: mm)

NX-Series NX102 CPU Unit

NX102-□□□□

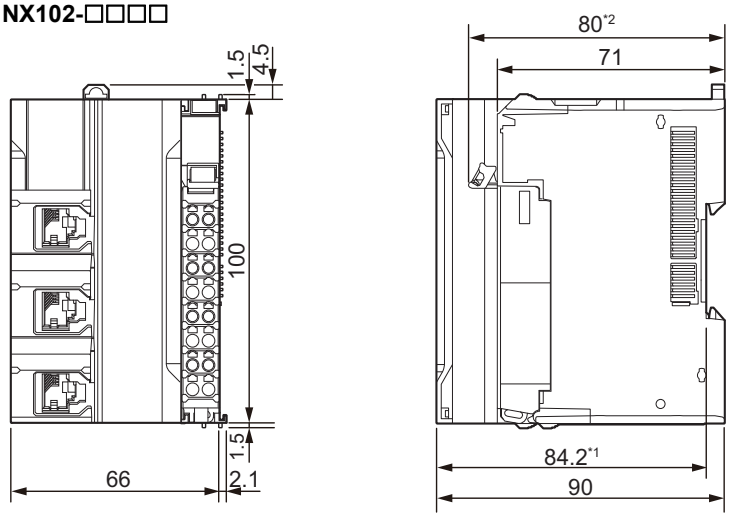

Unit: [mm]

*1. The dimension from the attachment surface of the DIN Track to the front surface of the CPU Unit.
*2. The dimension from the terminal block lock lever to the back surface of the CPU Unit.

For dimensions after attaching the communications cables, refer to *NX-series NX102 CPU Unit Hardware User's Manual (W593)*.

End cover

NX-END02

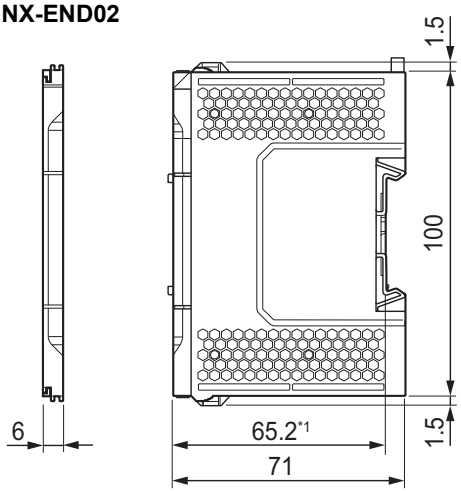

Unit: [mm]

*1. The dimension from the attachment surface of the DIN Track to the front surface of the end cover.

Related Manuals

The following manuals are related. Use these manuals for reference.

Manual name	Cat. No.	Model numbers	Application	Description
NX-series NX102 CPU Unit Hardware User's Manual	W593	NX102-□□□□	Learning the basic specifications of the NX102 CPU Units, including introductory information, designing, installation, and maintenance. Mainly hardware information is provided.	An introduction to the entire NX102 system is provided along with the following information on the CPU Unit. • Features and system configuration • Introduction • Part names and functions • General specifications • Installation and wiring • Maintenance and Inspection
NJ/NX-series CPU Unit Software User's Manual	W501	NX701-□□□□ NX502-□□□□ NX102-□□□□ NX1P2-□□□□ NJ501-□□□□ NJ301-□□□□ NJ101-□□□□	Learning how to program and set up an NJ/NX-series CPU Unit. Mainly software information is provided.	The following information is provided on a Controller built with an NJ/NX-series CPU Unit. • CPU Unit operation • CPU Unit features • Initial settings • Programming based on IEC 61131-3 language specifications
NJ/NX-series Instructions Reference Manual	W502	NX701-□□□□ NX502-□□□□ NX102-□□□□ NX1P2-□□□□ NJ501-□□□□ NJ301-□□□□ NJ101-□□□□	Learning detailed specifications on the basic instructions of an NJ/NX-series CPU Unit.	The instructions in the instruction set (IEC 61131-3 specifications) are described.
NJ/NX-series CPU Unit Motion Control User's Manual	W507	NX701-□□□□ NX502-□□□□ NX102-□□□□ NX1P2-□□□□ NJ501-□□□□ NJ301-□□□□ NJ101-□□□□	Learning about motion control settings and programming concepts.	The settings and operation of the CPU Unit and programming concepts for motion control are described.
NJ/NX-series Motion Control Instructions Reference Manual	W508	NX701-□□□□ NX502-□□□□ NX102-□□□□ NX1P2-□□□□ NJ501-□□□□ NJ301-□□□□ NJ101-□□□□	Learning about the specifications of the motion control instructions.	The motion control instructions are described.
NJ/NX-series CPU Unit Built-in EtherCAT® Port User's Manual	W505	NX701-□□□□ NX502-□□□□ NX102-□□□□ NX1P2-□□□□ NJ501-□□□□ NJ301-□□□□ NJ101-□□□□	Using the built-in EtherCAT port on an NJ/NX-series CPU Unit.	Information on the built-in EtherCAT port is provided. This manual provides an introduction and provides information on the configuration, features, and setup.
NJ/NX-series CPU Unit Built-in EtherNet/IP™ Port User's Manual	W506	NX701-□□□□ NX502-□□□□ NX102-□□□□ NX1P2-□□□□ NJ501-□□□□ NJ301-□□□□ NJ101-□□□□	Using the built-in EtherNet/IP port on an NJ/NX-series CPU Unit.	Information on the built-in EtherNet/IP port is provided. Information is provided on the basic setup, tag data links, and other features.
NJ/NX-series CPU Unit OPC UA User's Manual	W588	NX701-□□□□ NX502-□□□□ NX102-□□□□ NJ501-1□00	Using the OPC UA.	Describes the OPC UA.
NX-series CPU Unit FINS Function User's Manual	W596	NX701-□□20 NX502-□□□□ NX102-□□□□	Using the FINS function of an NX-series CPU Unit.	Describes the FINS function of an NX-series CPU Unit.
NJ/NX-series Database Connection CPU Units User's Manual	W527	NX701-□□20 NX502-□□□□ NX102-□□20 NJ501-□□20 NJ101-□□20	Using the database connection service with NJ/NX-series Controllers.	Describes the database connection service.

Manual name	Cat. No.	Model numbers	Application	Description
NJ/NX-series Troubleshooting Manual	W503	NX701-□□□□ NX502-□□□□ NX102-□□□□ NX1P2-□□□□ NJ501-□□□□ NJ301-□□□□ NJ101-□□□□	Learning about the errors that may be detected in an NJ/NX-series Controller.	Concepts on managing errors that may be detected in an NJ/NX-series Controller and information on individual errors are described.
Sysmac Studio Version 1 Operation Manual	W504	SYSMAC-SE2□□□	Learning about the operating procedures and functions of the Sysmac Studio.	Describes the operating procedures of the Sysmac Studio.
NX-series EtherCAT® Coupler Unit User's Manual	W519	NX-ECC□□□	Learning how to use the NX-series EtherCAT Coupler Unit and EtherCAT Slave Terminals.	The following items are described: the overall system and configuration methods of an EtherCAT Slave Terminal (which consists of an NX-series EtherCAT Coupler Unit and NX Units), and information on hardware, setup, and functions to set up, control, and monitor NX Units through EtherCAT.
NX-series Data Reference Manual	W525	NX-□□□□□□	Referencing lists of the data that is required to configure systems with NX-series Units.	Lists of the power consumptions, weights, and other NX Unit data that is required to configure systems with NX-series Units are provided.
NX-series NX Units User's Manual	W521	NX-ID□□□□ NX-IA□□□□ NX-OC□□□□ NX-OD□□□□ NX-MD□□□□	Learning how to use NX Units.	Describes the hardware, setup methods, and functions of the NX Units. Manuals are available for the following Units. Digital I/O Units, Analog I/O Units, System Units, Position Interface Units, Communications Interface Units, Load Cell Input Unit, and IO-Link Master Units.
	W522	NX-AD□□□□ NX-DA□□□□		
	W566	NX-TS□□□□ NX-HB□□□□		
	W523	NX-PD1□□□ NX-PF0□□□ NX-PC0□□□ NX-TBX01		
	W524	NX-EC0□□□ NX-ECS□□□ NX-PG0□□□		
	W540	NX-CIF□□□		
	W565	NX-RS□□□□		
	W567	NX-ILM□□□		
NX-series Safety Control Unit User's Manual	Z930	NX-SL□□□□ NX-SI□□□□ NX-SO□□□□	Learning how to use NX-series Safety Control Units.	Describes the hardware, setup methods, and functions of the NX-series Safety Control Units.
NA-series Programmable Terminal Software User's Manual	V118	NA5-□W□□□□	Learning about NA-series PT pages and object functions.	Describes the pages and object functions of the NA-series Programmable Terminals.
NS-series Programmable Terminals Programming Manual	V073	NS15-□□□□□ NS12-□□□□□ NS10-□□□□□ NS8-□□□□□ NS5-□□□□□	Learning how to use the NS-series Programmable Terminals.	Describes the setup methods, functions, etc. of the NS-series Programmable Terminals.

Applicable Models for Cable Redundancy Function

For more information on applicable models of Cable Redundancy function, refer to the Applicable Models of Cable Redundancy Function (Cat. No. R200).

Sysmac is a trademark or registered trademark of OMRON Corporation in Japan and other countries for OMRON factory automation products.
Microsoft, Windows, Windows Vista, and SQL Server are either registered trademarks or trademarks of Microsoft Corporation in the United States and/or other countries.
Oracle, Oracle Database and MySQL are trademarks or registered trademarks of Oracle Corporation and/or its affiliates in the United States and other countries.
IBM and DB2 are trademarks or registered trademarks of International Business Machines Corp., registered in the United States and other countries.
EtherCAT® is a registered trademark and patented technology, licensed by Beckhoff Automation GmbH, Germany.
EtherNet/IP™, CIP Safety™, and DeviceNet™ are trademarks of ODVA.
OPC UA is a trademark of OPC Foundation.
This product includes software developed by the OpenSSL Project for use in the OpenSSL Toolkit. (http://www.openssl.org/)
This product includes cryptographic software written by Eric Young (eay@cryptsoft.com).
Other company names and product names in this document are the trademarks or registered trademarks of their respective companies.
The product photographs and figures that are used in this catalog may vary somewhat from the actual products.

Terms and Conditions Agreement

Read and understand this catalog.

Please read and understand this catalog before purchasing the products. Please consult your OMRON representative if you have any questions or comments.

Warranties.

(a) Exclusive Warranty. Omron's exclusive warranty is that the Products will be free from defects in materials and workmanship for a period of twelve months from the date of sale by Omron (or such other period expressed in writing by Omron). Omron disclaims all other warranties, express or implied.

(b) Limitations. OMRON MAKES NO WARRANTY OR REPRESENTATION, EXPRESS OR IMPLIED, ABOUT NON-INFRINGEMENT, MERCHANTABILITY OR FITNESS FOR A PARTICULAR PURPOSE OF THE PRODUCTS. BUYER ACKNOWLEDGES THAT IT ALONE HAS DETERMINED THAT THE PRODUCTS WILL SUITABLY MEET THE REQUIREMENTS OF THEIR INTENDED USE.

Omron further disclaims all warranties and responsibility of any type for claims or expenses based on infringement by the Products or otherwise of any intellectual property right. (c) Buyer Remedy. Omron's sole obligation hereunder shall be, at Omron's election, to (i) replace (in the form originally shipped with Buyer responsible for labor charges for removal or replacement thereof) the non-complying Product, (ii) repair the non-complying Product, or (iii) repay or credit Buyer an amount equal to the purchase price of the non-complying Product; provided that in no event shall Omron be responsible for warranty, repair, indemnity or any other claims or expenses regarding the Products unless Omron's analysis confirms that the Products were properly handled, stored, installed and maintained and not subject to contamination, abuse, misuse or inappropriate modification. Return of any Products by Buyer must be approved in writing by Omron before shipment. Omron Companies shall not be liable for the suitability or unsuitability or the results from the use of Products in combination with any electrical or electronic components, circuits, system assemblies or any other materials or substances or environments. Any advice, recommendations or information given orally or in writing, are not to be construed as an amendment or addition to the above warranty.

See http://www.omron.com/global/ or contact your Omron representative for published information.

Limitation on Liability; Etc.

OMRON COMPANIES SHALL NOT BE LIABLE FOR SPECIAL, INDIRECT, INCIDENTAL, OR CONSEQUENTIAL DAMAGES, LOSS OF PROFITS OR PRODUCTION OR COMMERCIAL LOSS IN ANY WAY CONNECTED WITH THE PRODUCTS, WHETHER SUCH CLAIM IS BASED IN CONTRACT, WARRANTY, NEGLIGENCE OR STRICT LIABILITY.

Further, in no event shall liability of Omron Companies exceed the individual price of the Product on which liability is asserted.

Suitability of Use.

Omron Companies shall not be responsible for conformity with any standards, codes or regulations which apply to the combination of the Product in the Buyer's application or use of the Product. At Buyer's request, Omron will provide applicable third party certification documents identifying ratings and limitations of use which apply to the Product. This information by itself is not sufficient for a complete determination of the suitability of the Product in combination with the end product, machine, system, or other application or use. Buyer shall be solely responsible for determining appropriateness of the particular Product with respect to Buyer's application, product or system. Buyer shall take application responsibility in all cases.

NEVER USE THE PRODUCT FOR AN APPLICATION INVOLVING SERIOUS RISK TO LIFE OR PROPERTY OR IN LARGE QUANTITIES WITHOUT ENSURING THAT THE SYSTEM AS A WHOLE HAS BEEN DESIGNED TO ADDRESS THE RISKS, AND THAT THE OMRON PRODUCT(S) IS PROPERLY RATED AND INSTALLED FOR THE INTENDED USE WITHIN THE OVERALL EQUIPMENT OR SYSTEM.

Programmable Products.

Omron Companies shall not be responsible for the user's programming of a programmable Product, or any consequence thereof.

Performance Data.

Data presented in Omron Company websites, catalogs and other materials is provided as a guide for the user in determining suitability and does not constitute a warranty. It may represent the result of Omron's test conditions, and the user must correlate it to actual application requirements. Actual performance is subject to the Omron's Warranty and Limitations of Liability.

Change in Specifications.

Product specifications and accessories may be changed at any time based on improvements and other reasons. It is our practice to change part numbers when published ratings or features are changed, or when significant construction changes are made. However, some specifications of the Product may be changed without any notice. When in doubt, special part numbers may be assigned to fix or establish key specifications for your application. Please consult with your Omron's representative at any time to confirm actual specifications of purchased Product.

Errors and Omissions.

Information presented by Omron Companies has been checked and is believed to be accurate; however, no responsibility is assumed for clerical, typographical or proofreading errors or omissions.

Note: Do not use this document to operate the Unit.

OMRON Corporation **Industrial Automation Company**

Kyoto, JAPAN **Contact : www.ia.omron.com**

Regional Headquarters

OMRON EUROPE B.V.
Wegalaan 67-69, 2132 JD Hoofddorp
The Netherlands
Tel: (31) 2356-81-300 Fax: (31) 2356-81-388

OMRON ELECTRONICS LLC
2895 Greenspoint Parkway, Suite 200
Hoffman Estates, IL 60169 U.S.A.
Tel: (1) 847-843-7900 Fax: (1) 847-843-7787

OMRON ASIA PACIFIC PTE. LTD.
438B Alexandra Road, #08-01/02 Alexandra
Technopark, Singapore 119968
Tel: (65) 6835-3011 Fax: (65) 6835-3011

OMRON (CHINA) CO., LTD.
Room 2211, Bank of China Tower,
200 Yin Cheng Zhong Road,
PuDong New Area, Shanghai, 200120, China
Tel: (86) 21-6023-0333 Fax: (86) 21-5037-2388

Authorized Distributor:

©OMRON Corporation 2018-2025 All Rights Reserved.
In the interest of product improvement,
specifications are subject to change without notice.

CSM_4_10

Cat. No. P130-E1-24 0625 (0418)