Photomicrosensor with Slim Cable (Non-modulated)

EE-SX77/87

CSM_EE-SX77_87_DS_E_7_10

Slim, Compact Photomicrosensor that is still easy to use.

- Compact, thin profile enables dense mounting.
- Indicator is visible from both sides.
- Wide operating voltage range: 5 to 24 VDC

For the most recent information on models that have been certified for safety standards, refer to your OMRON website.

Be sure to read *Safety Precautions* on page 4.

Ordering Information

Pre-wired Models Infrared light

Appearance	Sensing method	Cable length	Sensing distance		Output configuration	Indicator mode	Model	
							NPN output	PNP output
Standard	Through-beam type (with slot)	2 m		5 mm (slot width)	Dark-ON	Incident light	**EE-SX770 2M**	**EE-SX770P 2M**
						No incident light	**EE-SX770A 2M**	**EE-SX770R 2M**
					Light-ON	Incident light	**EE-SX870 2M**	**EE-SX870P 2M**
						No incident light	**EE-SX870A 2M**	**EE-SX870R 2M**
L-shaped					Dark-ON	Incident light	**EE-SX771 2M**	**EE-SX771P 2M**
						No incident light	**EE-SX771A 2M**	**EE-SX771R 2M**
					Light-ON	Incident light	**EE-SX871 2M**	**EE-SX871P 2M**
						No incident light	**EE-SX871A 2M**	**EE-SX871R 2M**
T-shaped					Dark-ON	Incident light	**EE-SX772 2M**	**EE-SX772P 2M**
						No incident light	**EE-SX772A 2M**	**EE-SX772R 2M**
					Light-ON	Incident light	**EE-SX872 2M**	**EE-SX872P 2M**
						No incident light	**EE-SX872A 2M**	**EE-SX872R 2M**

Ratings and Specifications

Item	Type	Standard	L-shaped	T-shaped
	NPN models	EE-SX770/EE-SX870 EE-SX770A/EE-SX870A	EE-SX771/EE-SX871 EE-SX771A/EE-SX871A	EE-SX772/EE-SX872 EE-SX772A/EE-SX872A
	PNP models	EE-SX770P/EE-SX870P EE-SX770R/EE-SX870R	EE-SX771P/EE-SX871P EE-SX771R/EE-SX871R	EE-SX772P/EE-SX872P EE-SX772R/EE-SX872R
Sensing distance		5 mm (slot width)		
Sensing object		Opaque: 2 × 0.8 mm min.		
Differential distance		0.025 mm		
Light source		GaAs infrared LED with a peak wavelength of 940 nm		
Indicator		Light indicator (red) (turns ON when light is interrupted for models with A or R suffix)		
Supply voltage		5 to 24 VDC ±10%, ripple (p-p): 10% max.		
Current consumption		12 mA max.		
Control output		NPN open collector: 5 to 24 VDC, 100 mA max. 100 mA load current with a residual voltage of 0.8 V max. 40 mA load current with a residual voltage of 0.4 V max. OFF current (leakage current): 0.5 mA max. PNP open collector: 5 to 24 VDC, 50 mA max. 50 mA load current with a residual voltage of 1.3 V max. OFF current (leakage current): 0.5 mA max.		
Protection circuits		Load short-circuit protection		
Response time		Light-ON: 20 μs max, Dark-ON: 100 μs max.		
Maximum response frequency *1		3 kHz max.		
Ambient illumination		1,000 lx max. with fluorescent light on the surface of the receiver		
Ambient temperature range		Operating: –25 to +55°C Storage: –30 to +80°C (with no icing)		
Ambient humidity range		Operating: 5% to 85% Storage: 5% to 95% (with no condensation)		
Vibration resistance		Destruction: 10 to 2,000 Hz (peak acceleration: 100 m/s^2) 1.5-mm double amplitude for 2 h (4-min periods) each in X, Y, and Z directions		
Shock resistance		Destruction: 500 m/s^2 for 3 times each in X, Y, and Z directions		
Degree of protection *2		IEC60529 IP64		
Connecting method		Pre-wired (standard cable length: 2 m)		
Weight (packaged)		Approx. 20 g		
Material		Case: Polybutylene phthalate (PBT)		
Conformity standards		UL Certification, CE Marking, ISO13849-1 (PLc, cat1) *2		
MTTFd (Year)		NPN models: 837 PNP models: 832		

*1. The response frequency was measured by detecting the following rotating disk.

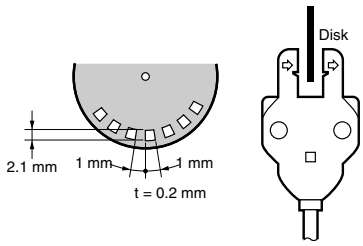

*2. Degree of protection IP64 when conforming to ISO13849-1 (PLc, cat1). Conforms to September 2023.
Refer to the Instruction Sheet and Information for ISO13849-1 Compliance on our website (www.fa.omron.co.jp/products/family/435/download/manual.html) for conformance to ISO 13849-1.

Engineering Data (Reference Value)

Sensing Position Characteristics

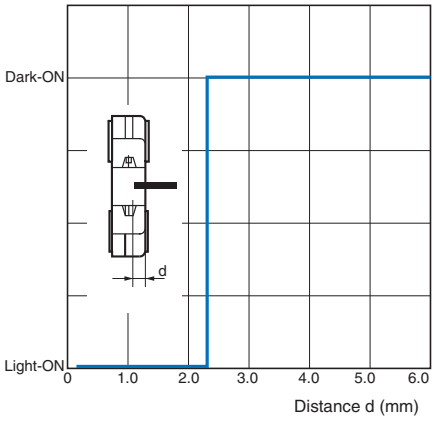

Sensing Position Characteristics

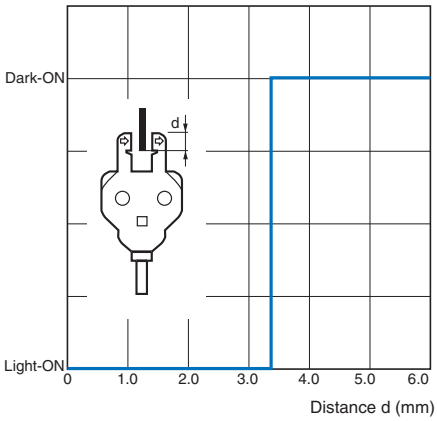

Repeated Sensing Position Characteristics

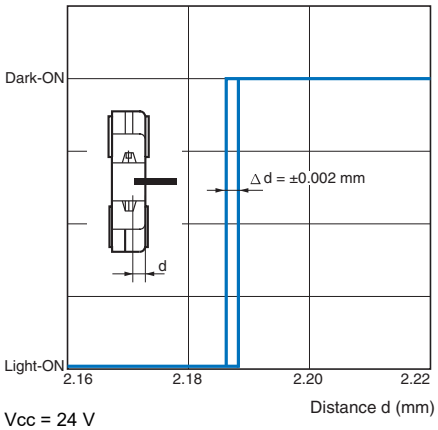

Vcc = 24 V
No. of repetitions: 20, Ta = 25°C
Note: The data applies to dark status. Operation may be affected by external light interference or light coming through the sensing object.

I/O Circuit Diagrams

NPN Output

Model	Output configuration	Timing charts	Output circuit
EE-SX770 EE-SX771 EE-SX772	Dark-ON	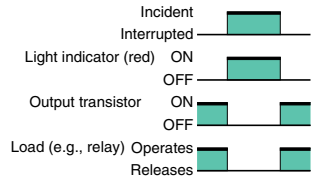	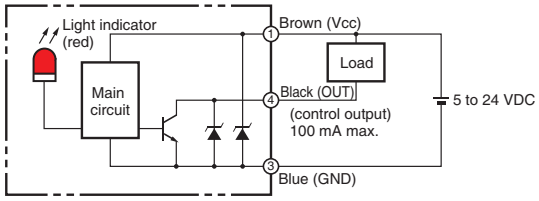
EE-SX870 EE-SX871 EE-SX872	Light-ON	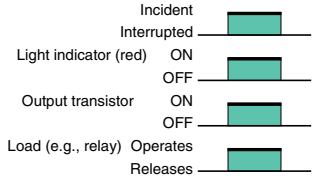	
EE-SX770A EE-SX771A EE-SX772A	Dark-ON	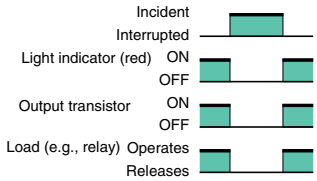	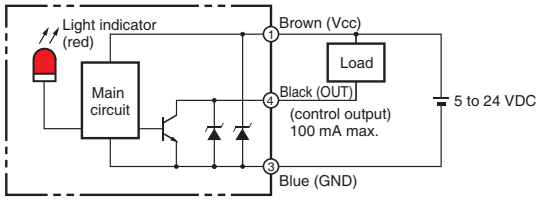
EE-SX870A EE-SX871A EE-SX872A	Light-ON	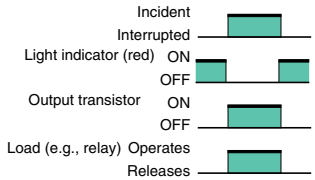	

PNP Output

Model	Output configuration	Timing chart	Output circuit
EE-SX770P EE-SX771P EE-SX772P	Dark-ON	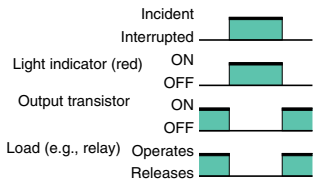	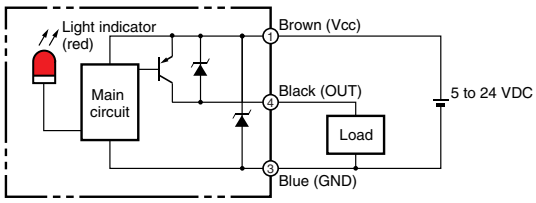
EE-SX870P EE-SX871P EE-SX872P	Light-ON	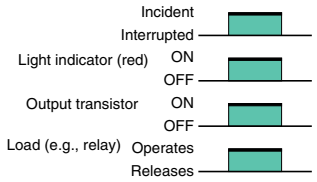	
EE-SX770R EE-SX771R EE-SX772R	Dark-ON	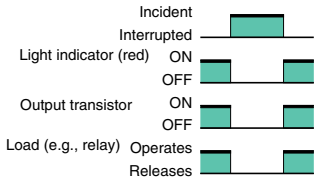	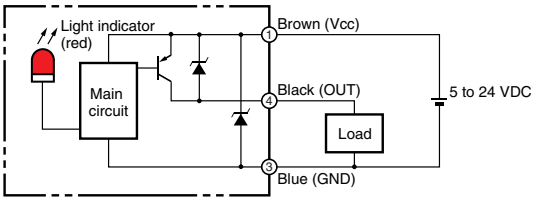
EE-SX870R EE-SX871R EE-SX872R	Light-ON	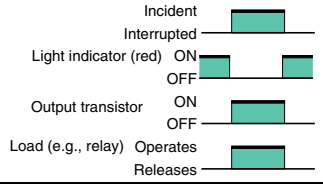	

Safety Precautions

Refer to *Warranty and Limitations of Liability*.

⚠ WARNING

This product is not designed or rated for ensuring safety of persons either directly or indirectly. Do not use it for such purposes.

Precautions for Correct Use

Make sure that this product is used within the rated ambient environment conditions.

(Unit: mm)

Dimensions

Tolerance class IT16 applies to dimensions in this datasheet unless otherwise specified.

Standard
EE-SX770/770P
EE-SX870/870P
EE-SX770A/770R
EE-SX870A/870R

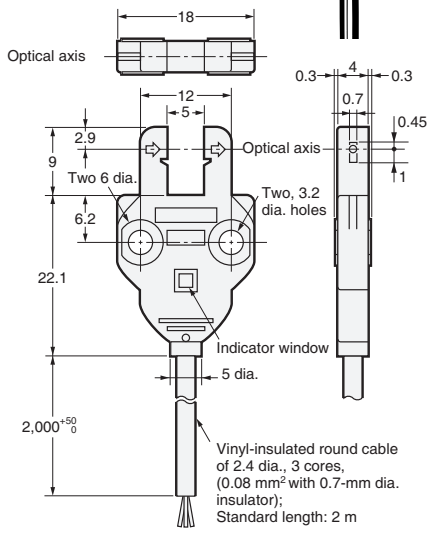

L-shaped
EE-SX771/771P
EE-SX871/871P
EE-SX771A/771R
EE-SX871A/871R

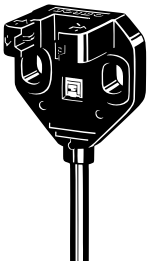

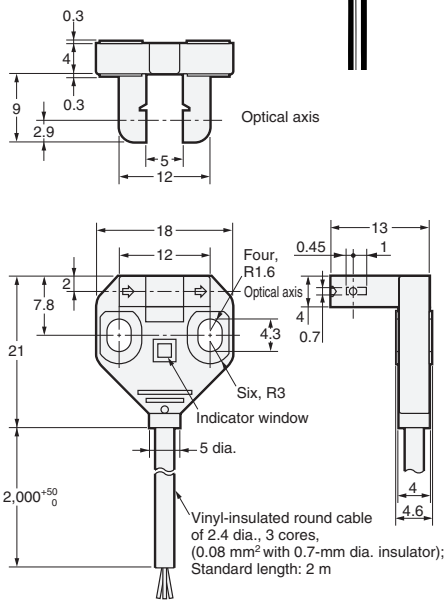

T-shaped
EE-SX772/772P
EE-SX872/872P
EE-SX772A/772R
EE-SX872A/872R

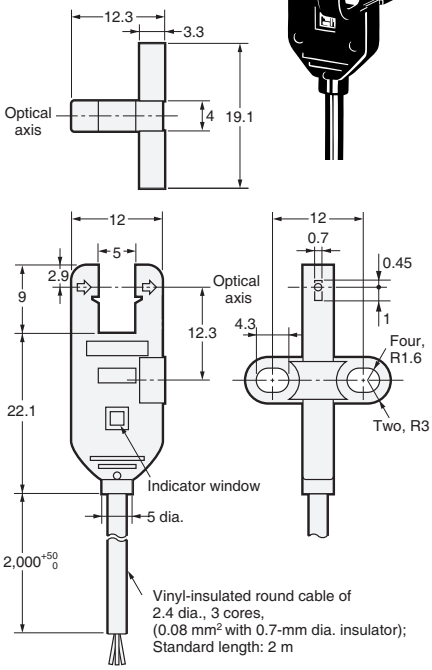

Terms and Conditions Agreement

Read and understand this catalog.
Please read and understand this catalog before purchasing the products. Please consult your OMRON representative if you have any questions or comments.

Warranties.
(a) Exclusive Warranty. Omron's exclusive warranty is that the Products will be free from defects in materials and workmanship for a period of twelve months from the date of sale by Omron (or such other period expressed in writing by Omron). Omron disclaims all other warranties, express or implied.
(b) Limitations. OMRON MAKES NO WARRANTY OR REPRESENTATION, EXPRESS OR IMPLIED, ABOUT NON-INFRINGEMENT, MERCHANTABILITY OR FITNESS FOR A PARTICULAR PURPOSE OF THE PRODUCTS. BUYER ACKNOWLEDGES THAT IT ALONE HAS DETERMINED THAT THE
PRODUCTS WILL SUITABLY MEET THE REQUIREMENTS OF THEIR INTENDED USE.
Omron further disclaims all warranties and responsibility of any type for claims or expenses based on infringement by the Products or otherwise of any intellectual property right. (c) Buyer Remedy. Omron's sole obligation hereunder shall be, at Omron's election, to (i) replace (in the form originally shipped with Buyer responsible for labor charges for removal or replacement thereof) the non-complying Product, (ii) repair the non-complying Product, or (iii) repay or credit Buyer an amount equal to the purchase price of the non-complying Product; provided that in no event shall Omron be responsible for warranty, repair, indemnity or any other claims or expenses regarding the Products unless Omron's analysis confirms that the Products were properly handled, stored, installed and maintained and not subject to contamination, abuse, misuse or inappropriate modification. Return of any Products by Buyer must be approved in writing by Omron before shipment. Omron Companies shall not be liable for the suitability or unsuitability or the results from the use of Products in combination with any electrical or electronic components, circuits, system assemblies or any other materials or substances or environments. Any advice, recommendations or information given orally or in writing, are not to be construed as an amendment or addition to the above warranty.
See http://www.omron.com/global/ or contact your Omron representative for published information.

Limitation on Liability; Etc.
OMRON COMPANIES SHALL NOT BE LIABLE FOR SPECIAL, INDIRECT, INCIDENTAL, OR CONSEQUENTIAL DAMAGES, LOSS OF PROFITS OR PRODUCTION OR COMMERCIAL LOSS IN ANY WAY CONNECTED WITH THE PRODUCTS, WHETHER SUCH CLAIM IS BASED IN CONTRACT, WARRANTY, NEGLIGENCE OR STRICT LIABILITY.
Further, in no event shall liability of Omron Companies exceed the individual price of the Product on which liability is asserted.

Suitability of Use.
Omron Companies shall not be responsible for conformity with any standards, codes or regulations which apply to the combination of the Product in the Buyer's application or use of the Product. At Buyer's request, Omron will provide applicable third party certification documents identifying ratings and limitations of use which apply to the Product. This information by itself is not sufficient for a complete determination of the suitability of the Product in combination with the end product, machine, system, or other application or use. Buyer shall be solely responsible for determining appropriateness of the particular Product with respect to Buyer's application, product or system. Buyer shall take application responsibility in all cases.
NEVER USE THE PRODUCT FOR AN APPLICATION INVOLVING SERIOUS RISK TO LIFE OR PROPERTY OR IN LARGE QUANTITIES WITHOUT ENSURING THAT THE SYSTEM AS A WHOLE HAS BEEN DESIGNED TO ADDRESS THE RISKS, AND THAT THE OMRON PRODUCT(S) IS PROPERLY RATED AND INSTALLED FOR THE INTENDED USE WITHIN THE OVERALL EQUIPMENT OR SYSTEM.

Programmable Products.
Omron Companies shall not be responsible for the user's programming of a programmable Product, or any consequence thereof.

Performance Data.
Data presented in Omron Company websites, catalogs and other materials is provided as a guide for the user in determining suitability and does not constitute a warranty. It may represent the result of Omron's test conditions, and the user must correlate it to actual application requirements. Actual performance is subject to the Omron's Warranty and Limitations of Liability.

Change in Specifications.
Product specifications and accessories may be changed at any time based on improvements and other reasons. It is our practice to change part numbers when published ratings or features are changed, or when significant construction changes are made. However, some specifications of the Product may be changed without any notice. When in doubt, special part numbers may be assigned to fix or establish key specifications for your application. Please consult with your Omron's representative at any time to confirm actual specifications of purchased Product.

Errors and Omissions.
Information presented by Omron Companies has been checked and is believed to be accurate; however, no responsibility is assumed for clerical, typographical or proofreading errors or omissions.

2025.4

In the interest of product improvement, specifications are subject to change without notice.

OMRON Corporation
Industrial Automation Company

http://www.ia.omron.com/

(c)Copyright OMRON Corporation 2025 All Right Reserved.