Temperature Sensor
E52

CSM_E52_DS_E_22_8

A Wide Variety of High-precision Temperature Sensors

- Previous models with M3 screw connections have been joined by new models with ferrules to help reduce wiring work.
- A Temperature Sensor for Packaging Machines that accurately measures seal temperature has been added.
- The type, shape, length, and terminal shape can be selected to match the temperature to be measured, location, and environment.

⚠ Refer to *Safety Precautions for All Temperature Controllers.*

Ordering Information

■List of Models (Temperature Sensors)

Classification	Description	Model and appearance	Temperature range (See note 3.)	Element type	Conductor type	Class	Protective tubing material	Terminal type	Page
General-purpose Models	Sheathed platinum resistance thermometer	E52-P□AY 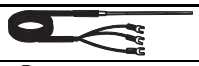	–196°C to 450°C	Pt100	3-conductor system	B	SUS316	Exposed lead wires	5
		E52-P□C-N 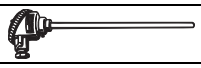	–196°C to 450°C				ASTM316L	Enclosed terminals	7
		E52-P□B-N						Exposed terminals	
	Standard platinum resistance thermometer	E52-P□C-N 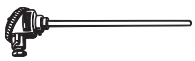	0°C to 450°C				SUS316	Enclosed terminals	8
	Sheathed thermocouple	E52-CA□AY E52-IC□AY 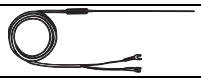	0°C to 900°C	K (CA) J (IC)	Non-grounded type	2 (0.75)	ASTM316L	Exposed lead wires	11 to 12
		E52-CA□B-N E52-IC□B-N						Exposed terminals	16
		E52-CA□C-N E52-IC□C-N 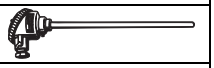						Enclosed terminals	
	Standard thermocouple	E52-CA□B-N E52-IC□B-N					SUS316	Exposed terminals	17
		E52-CA□C-N E52-IC□C-N 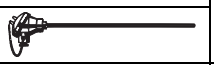						Enclosed terminals	18
		E52-PR□C-N	0°C to 1,400°C	R (PR)		2 (0.25)	JIS ceramic JIS special ceramic	Enclosed terminals	19
Low-cost Models	Low-cost platinum resistance thermometer	E52-P10AEY 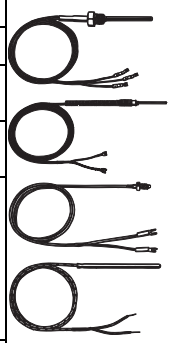	0°C to 250°C	Pt100	3-conductor system	B	SUS316	Exposed lead wires	20
		E52-P6DY	–50°C to 250°C				SUS304		
		E52-P6FY							
	Low-cost thermocouple	E52-CA□ASY E52-IC□ASY	0°C to 400°C	K (CA) J (IC)	Non-grounded type	2 (0.75)			21
		E52-CA1DY E52-IC1DY			Grounded type				22
		E52-CA6F-N E52-CA6F-N-25 E52-IC6F-N E52-CA6D-N E52-CA6D-N-25 E52-IC6D-N							23
		E52-CA10AE-N E52-IC10AE-N			Non-grounded type				

Note: 1. Exclusive models are provided on the following page.
2. These tables provide general specifications only. Be sure to read the detailed specifications and precautions before use.
3. The temperature range varies with the material, thickness, construction, and element type of the protective tubing.

Classification	Description	Model and appearance	Temperature range (See note 3.)	Element type	Conductor type	Class	Protective tubing material	Terminal type	Page
Exclusive Models	Bayonet spring for molding machines	E52-CA2GVY E52-IC2GVY	0°C to 350°C	K (CA) J (IC)	Grounded type	2 (0.75)	SUS304	Exposed lead wires	25
	Crimping terminals	E52-CA1GTY E52-IC1GTY	0°C to 300°C				---		
	Used for measuring surface temperatures	E52-P2GSY	–50°C to 250°C	Pt100	3-conductor system	B	SUS304		26
	Used for room temperature measurement	E52-P10GRY	–50°C to 60°C						
	Double-element model	E52-CA20AY-7	0°C to 900°C	K (CA)	Two non-grounded types	2 (0.75)	ASTM316L		32
		E52-P20AY-7	–196°C to 250°C	Pt100	Two 3-conductor systems	B			
		E52-P20C-N-7	–200°C to 450°C					Enclosed terminals	33
	Waterproof model	E52-P10GPY	0°C to 70°C		3-conductor system		SUS304	Exposed lead wires	27
		E52-P5AY-40	–50°C to 180°C				Fluororesin tubing		29
	Corrosion-resistant model	E52-P20AY-1	–80°C to 180°C						
		E52-CA20AY-1	0°C to 180°C	K (CA)	Non-grounded type	2 (0.75)			
	Silicone-covered lead wires	E52-CA1DY-40	0°C to 300°C		Grounded type		SUS304		34
		E52-CA1GTY-14	0°C to 200°C				---		
	Explosion-proof model	E52-P□□C-N-6	---	Pt100	3-conductor system	B	ASTM316L	Enclosed terminals	30
		E52-CA□□C-N-6	---	K (CA)	Non-grounded type	2 (0.75)			
Special models for packaging machines	Sheathed thermocouple	E52-CA□AY D=1 S□	0°C to 650°C	K (CA)	Grounded type	2 (0.75)	ASTM316L	Exposed lead wires	35 to 37
Thermistors		E52-THE5A E52-THE6F E52-THE6D	–50°C to 300°C	Thermistor	Element-interchangeable thermistor	1	SUS304	Exposed lead wires	39

Note: 1. General-purpose models and low-cost models are provided on the previous page.
2. These tables provide general specifications only. Be sure to read the detailed specifications and precautions before use.
3. The temperature range varies with the material, thickness, construction, and element type of the protective tubing.

Use the temperature sensors with ferrule from the list on the next page.

■List of Models (Temperature Sensors with ferrule)

Classification	Description	Model and appearance	Temperature range (See note 3.)	Element type	Conductor type	Class	Protective tubing material	Terminal type	Page
General-purpose Models	Sheathed platinum resistance thermometer	E52-P□AF	–196°C to 450°C	Pt100	3-conductor system	B	SUS316	Exposed lead wires	41
	Sheathed thermocouple	E52-CA□AF 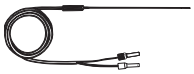	0°C to 900°C	K (CA)	Non-grounded type	2 (0.75)	ASTM316L		43 to 44
Low-cost Models	Low-cost platinum resistance thermometer	E52-P10AEF 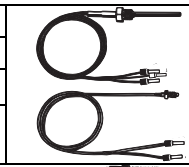	0°C to 250°C	Pt100	3-conductor system	B	SUS316		45
		E52-P6DF	–50°C to 250°C				SUS304		
		E52-P6FF							
	Low-cost thermocouple	E52-CA1DF	0°C to 400°C	K (CA)	Grounded type	2 (0.75)			46
Exclusive Models	Bayonet spring for molding machines	E52-CA2GVF 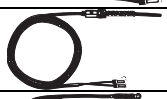	0°C to 350°C	K (CA)	Grounded type	2 (0.75)	SUS304		47
	Crimping terminals	E52-CA1GTF	0°C to 300°C				---		
	Used for measuring surface temperatures	E52-P2GSF	–50°C to 250°C	Pt100	3-conductor system	B	SUS304		
	Used for room temperature measurement	E52-P10GRF 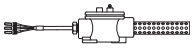	–50°C to 60°C						48
	Waterproof model	E52-P10GPF 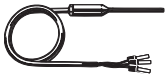	0°C to 70°C						
		E52-P5AF-40	–50°C to 180°C				Fluororesin tubing		49
	Silicone-covered lead wires	E52-CA1DF-40 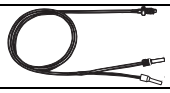	0°C to 300°C	K (CA)	Grounded type	2 (0.75)	SUS304		50
		E52-CA1GTF-14 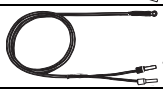	0°C to 200°C				---		
Special models for packaging machines	Sheathed thermocouple	E52-CA□AF D=1 S□	0°C to 650°C	K (CA)	Grounded type	2 (0.75)	ASTM316L		51 to 52

Note: 1. These tables provide general specifications only. Be sure to read the detailed specifications and precautions before use.
2. The temperature range varies with the material, thickness, construction, and element type of the protective tubing.

■Accessories

It is recommended that the following accessories be used for mounting Temperature Sensors.

Accessory	Temperature range	Mounting example	Page
Compression Fitting	600°C max.	Mounting with Compression Fitting 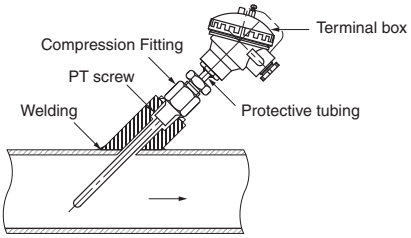 **Note:** The Compression Fitting is not of airtight construction. Do not use the Compression Fitting for applications in which the exposure of the sensing object will cause problems.	53
Loose Flange	400°C max.	Mounting with Loose Flange 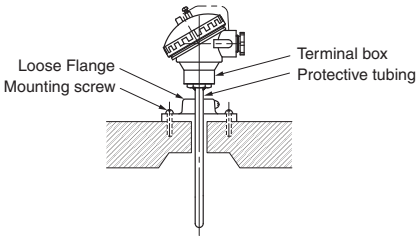 **Note: 1.** Use the Loose Flange in normal atmospheric pressure. The Loose Flange is not of airtight construction. **2.** Use the Loose Flange at 400°C max. **3.** Do not apply the Loose Flange to protective tubing diameters other than the applicable ones.	54

General-purpose Models

■Model Number Legend

The type of resistance thermometer, protective tubing length, and lead length can be specified as shown below.

Platinum Resistance Thermometers

E52-P□□ D=□□□M
1 2 3 4 5 6

1. **Element type**
   P: Pt100
2. **Protective tubing length (L)**
   Specify the length in centimeters within the following range:
   Unit (cm)

   E52-P□AY

Diameter (D)	Length (L)
3.2	10, 15, 20, 35, 50, 100
4.8	10, 15, 20, 35, 50, 100
6.4	20, 35, 50, 100

   E52-P□B-N

Diameter (D)	Length (L)
8	20, 35, 50

   E52-P□C-N

Diameter (D)	Length (L)
3.2	15, 20, 25, 30, 35, 50, 75, 100
4.8	15, 20, 25, 30, 35, 50, 75, 100
6.4	20, 25, 30, 35, 50, 75, 100
8	20, 25, 30, 35, 50, 75, 100
10	30, 35, 50, 75, 100

3. **Terminal**
   AY: Exposed lead wires (Y-type crimp terminal for M3.5)
   B-N: Exposed terminals
   C-N: Enclosed terminals
4. **Diameter**
   3.2: 3.2-mm dia. (Protective tubing construction: Sheathed)
   E52-P□AY and E52-P□C-N only
   4.8: 4.8-mm dia. (Protective tubing construction: Sheathed)
   E52-P□AY and E52-P□C-N only
   6.4: 6.4-mm dia. (Protective tubing construction: Sheathed)
   E52-P□AY and E52-P□C-N only
   8: 8-mm dia. (Protective tubing construction: Sheathed)
   E52-P□B-N and E52-P□C-N only
   10: 10-mm dia. (Protective tubing construction: Standard)
   E52-P□C-N only
5. **Heat resistance**

Code	Temperature range	Lead type
---	–20°C to 70°C Sleeve: 0°C to 70°C	Vinyl-covered
NETU	0°C to 180°C Sleeve: 0°C to 100°C	Glass-wool-covered, externally shielded with stainless

   Specify for E52-P□AY model only.
6. **Lead length (M)**
   Specify the length in meters within the following range for the E52-P□AY only:
   Range: 1, 2, 4, 8 m

Examples

Element: Pt100, protective tubing length: 150 mm, exposed leads, protective tubing dia.: 4.8 mm, heat resistive, lead length: 8 m
E52-P15AY D=4.8 NETU 8M

■Sheathed Platinum Resistance Thermometers

Refer to *Model Number Legend* above for the Pt100.

Specifications

Element type	Pt100
Class	JIS class B
Sheath material	SUS316 (E52-P□AY) ASTM316L (E52-P□B-N, E52-P□C-N)
Sheath outer diameter	3.2 dia., 4.8 dia., 6.4 dia., 8 dia
Conductor type	3-conductor system
Temperature range	–196°C to 450°C (in dry air)

Exposed-lead Models

E52-P□AY

Dimensions

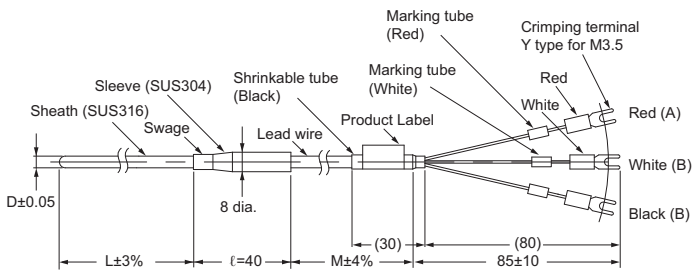

Unit (mm)

D	d	ℓ
3.2 dia.	8	40
4.8 dia.	8	40
6.4 dia.	8	40

Lead Wire

- Standard (–20°C to 70°C): Fully vinyl-covered with twelve 0.18-dia conductors (0.3 mm thick) and 4.8 mm in outer dia. The sleeve resists a temperature range between 0°C and 70°C.
- Heat Resistive (0°C to 180°C): Fully glass-wool-covered with thirty 0.12-dia. conductors (0.3 mm thick) externally shielded with stainless steel, 4 mm in outer dia. The sleeve resists a temperature range between 0°C and 100°C.
- Lead Wire Length (M): 1, 2, 4, or 8 m

Model Information

Terminal type	Protective tubing diameter D (mm)	Protective tubing length L (cm)	Lead wire type	Lead wire length M (m)			
				1	2	4	8
				Model			
Exposed-lead Models	3.2 dia.	10	Standard	E52-P10AY D=3.2 1M	E52-P10AY D=3.2 2M	E52-P10AY D=3.2 4M	E52-P10AY D=3.2 8M
			Heat resistive	E52-P10AY D=3.2 NETU 1M	E52-P10AY D=3.2 NETU 2M	E52-P10AY D=3.2 NETU 4M	E52-P10AY D=3.2 NETU 8M
		15	Standard	E52-P15AY D=3.2 1M	E52-P15AY D=3.2 2M	E52-P15AY D=3.2 4M	E52-P15AY D=3.2 8M
			Heat resistive	E52-P15AY D=3.2 NETU 1M	E52-P15AY D=3.2 NETU 2M	E52-P15AY D=3.2 NETU 4M	E52-P15AY D=3.2 NETU 8M
		20	Standard	E52-P20AY D=3.2 1M	E52-P20AY D=3.2 2M	E52-P20AY D=3.2 4M	E52-P20AY D=3.2 8M
			Heat resistive	E52-P20AY D=3.2 NETU 1M	E52-P20AY D=3.2 NETU 2M	E52-P20AY D=3.2 NETU 4M	E52-P20AY D=3.2 NETU 8M
		35	Standard	E52-P35AY D=3.2 1M	E52-P35AY D=3.2 2M	E52-P35AY D=3.2 4M	E52-P35AY D=3.2 8M
			Heat resistive	E52-P35AY D=3.2 NETU 1M	E52-P35AY D=3.2 NETU 2M	E52-P35AY D=3.2 NETU 4M	E52-P35AY D=3.2 NETU 8M
		50	Standard	E52-P50AY D=3.2 1M	E52-P50AY D=3.2 2M	E52-P50AY D=3.2 4M	E52-P50AY D=3.2 8M
			Heat resistive	E52-P50AY D=3.2 NETU 1M	E52-P50AY D=3.2 NETU 2M	E52-P50AY D=3.2 NETU 4M	E52-P50AY D=3.2 NETU 8M
		100	Standard	E52-P100AY D=3.2 1M	E52-P100AY D=3.2 2M	E52-P100AY D=3.2 4M	E52-P100AY D=3.2 8M
			Heat resistive	E52-P100AY D=3.2 NETU 1M	E52-P100AY D=3.2 NETU 2M	E52-P100AY D=3.2 NETU 4M	E52-P100AY D=3.2 NETU 8M

Terminal type	Protective tubing diameter D (mm)	Protective tubing length L (cm)	Lead wire type	Lead wire length M (m)			
				1	2	4	8
				Model			
Exposed-lead Models	4.8 dia.	10	Standard	E52-P10AY D=4.8 1M	E52-P10AY D=4.8 2M	E52-P10AY D=4.8 4M	E52-P10AY D=4.8 8M
			Heat resistive	E52-P10AY D=4.8 NETU 1M	E52-P10AY D=4.8 NETU 2M	E52-P10AY D=4.8 NETU 4M	E52-P10AY D=4.8 NTU 8M
		15	Standard	E52-P15AY D=4.8 1M	E52-P15AY D=4.8 2M	E52-P15AY D=4.8 4M	E52-P15AY D=4.8 8M
			Heat resistive	E52-P15AY D=4.8 NETU 1M	E52-P15AY D=4.8 NETU 2M	E52-P15AY D=4.8 NETU 4M	E52-P15AY D=4.8 NETU 8M
		20	Standard	E52-P20AY D=4.8 1M	E52-P20AY D=4.8 2M	E52-P20AY D=4.8 4M	E52-P20AY D=4.8 8M
			Heat resistive	E52-P20AY D=4.8 NETU 1M	E52-P20AY D=4.8 NETU 2M	E52-P20AY D=4.8 NETU 4M	E52-P20AY D=4.8 NETU 8M
		35	Standard	E52-P35AY D=4.8 1M	E52-P35AY D=4.8 2M	E52-P35AY D=4.8 4M	E52-P35AY D=4.8 8M
			Heat resistive	E52-P35AY D=4.8 NETU 1M	E52-P35AY D=4.8 NETU 2M	E52-P35AY D=4.8 NETU 4M	E52-P35AY D=4.8 NETU 8M
		50	Standard	E52-P50AY D=4.8 1M	E52-P50AY D=4.8 2M	E52-P50AY D=4.8 4M	E52-P50AY D=4.8 8M
			Heat resistive	E52-P50AY D=4.8 NETU 1M	E52-P50AY D=4.8 NETU 2M	E52-P50AY D=4.8 NETU 4M	E52-P50AY D=4.8 NETU 8M
		100	Standard	E52-P100AY D=4.8 1M	E52-P100AY D=4.8 2M	E52-P100AY D=4.8 4M	E52-P100AY D=4.8 8M
			Heat resistive	E52-P100AY D=4.8 NETU 1M	E52-P100AY D=4.8 NETU 2M	E52-P100AY D=4.8 NETU 4M	E52-P100AY D=4.8 NETU 8M
	6.4 dia.	20	Standard	E52-P20AY D=6.4 1M	E52-P20AY D=6.4 2M	E52-P20AY D=6.4 4M	E52-P20AY D=6.4 8M
			Heat resistive	E52-P20AY D=6.4 NETU 1M	E52-P20AY D=6.4 NETU 2M	E52-P20AY D=6.4 NETU 4M	E52-P20AY D=6.4 NETU 8M
		35	Standard	E52-P35AY D=6.4 1M	E52-P35AY D=6.4 2M	E52-P35AY D=6.4 4M	E52-P35AY D=6.4 8M
			Heat resistive	E52-P35AY D=6.4 NETU 1M	E52-P35AY D=6.4 NETU 2M	E52-P35AY D=6.4 NETU 4M	E52-P35AY D=6.4 NETU 8M
		50	Standard	E52-P50AY D=6.4 1M	E52-P50AY D=6.4 2M	E52-P50AY D=6.4 4M	E52-P50AY D=6.4 8M
			Heat resistive	E52-P50AY D=6.4 NETU 1M	E52-P50AY D=6.4 NETU 2M	E52-P50AY D=6.4 NETU 4M	E52-P50AY D=6.4 NETU 8M
		100	Standard	EE52-P100AY D=6.4 1M	E52-P100AY D=6.4 2M	E52-P100AY D=6.4 4M	E52-P100AY D=6.4 8M
			Heat resistive	E52-P100AY D=6.4 NETU 1M	E52-P100AY D=6.4 NETU 2M	E52-P100AY D=6.4 NETU 4M	E52-P100AY D=6.4 NETU 8M

Enclosed-terminal Models

E52-P□C-N

Dimensions

Dimensions are given in millimeters, except for the length (L), which is provided in centimeters.

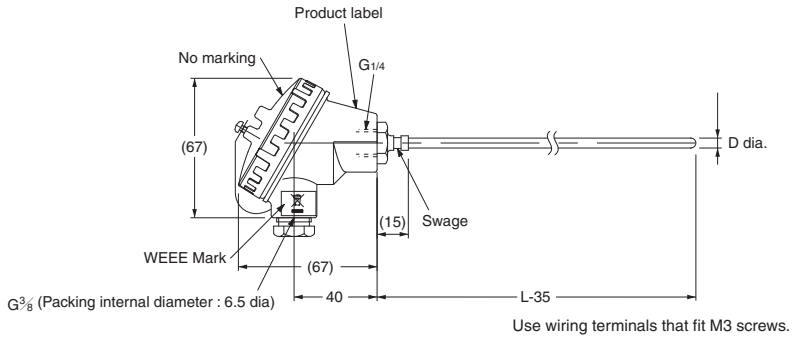

Terminal box: The permissible temperature is 0°C to 90°C.

Note: 1. The terminals in the cap indicate polarity (A, B, b).

2. The length L is in centimeters, but “35” is 35 millimeters.
Therefore, for the E52-P35C-N: L = 35 (cm), the sheath length L – 35 = 350 – 35 = 315 mm.

Model Information

Terminal type	Protective tubing length L (cm)	Protective tubing diameter D (mm)			
		3.2 dia.	4.8 dia.	6.4 dia.	8 dia.
		Model			
Enclosed-terminal Models	15	E52-P15C-N D=3.2	E52-P15C-N D=4.8	---	---
	20	E52-P20C-N D=3.2	E52-P20C-N D=4.8	E52-P20C-N D=6.4	E52-P20C-N D=8
	25	E52-P25C-N D=3.2	E52-P25C-N D=4.8	E52-P25C-N D=6.4	E52-P25C-N D=8
	30	E52-P30C-N D=3.2	E52-P30C-N D=4.8	E52-P30C-N D=6.4	E52-P30C-N D=8
	35	E52-P35C-N D=3.2	E52-P35C-N D=4.8	E52-P35C-N D=6.4	E52-P35C-N D=8
	50	E52-P50C-N D=3.2	E52-P50C-N D=4.8	E52-P50C-N D=6.4	E52-P50C-N D=8
	75	E52-P75C-N D=3.2	E52-P75C-N D=4.8	E52-P75C-N D=6.4	---
	100	E52-P100C-N D=3.2	E52-P100C-N D=4.8	E52-P100C-N D=6.4	E52-P100C-N D=8

Exposed-terminal Models

E52-P□B-N

Dimensions

Dimensions are given in millimeters, except for the length (L), which is provided in centimeters.

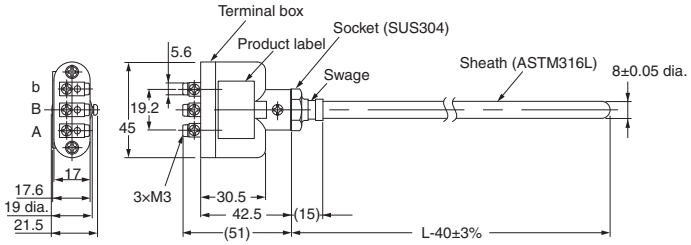

Terminal box: The permissible temperature is 0°C to 100°C.

Model Information

Terminal type	Protective tubing length L (cm)	Protective tubing diameter D (mm)
		8 dia.
		Model
Exposed-terminal Models	20	E52-P20B-N D=8
	35	E52-P35B-N D=8
	50	E52-P50B-N D=8

Note: The length L is in centimeters, but “40” is 40 millimeters.
Therefore, for the E52-P35B-N: L = 35 (cm), the sheath length L – 40 = 350 – 40 = 310 mm.

■Standard Platinum Resistance Thermometers

Refer to *Model Number Legend* on page 4 for the Pt100.

Specifications

Element type	Pt100
Class	JIS class B
Protective tubing material	SUS316
Conductor type	3-conductor system
Temperature range	0°C to 450°C (in dry air)

Note: 1. Use the sheathed platinum resistance thermometer if condensation is likely to result.

Enclosed-terminal Models

E52-P□C-N

Dimensions

Dimensions are given in millimeters, except for the length (L), which is provided in centimeters.

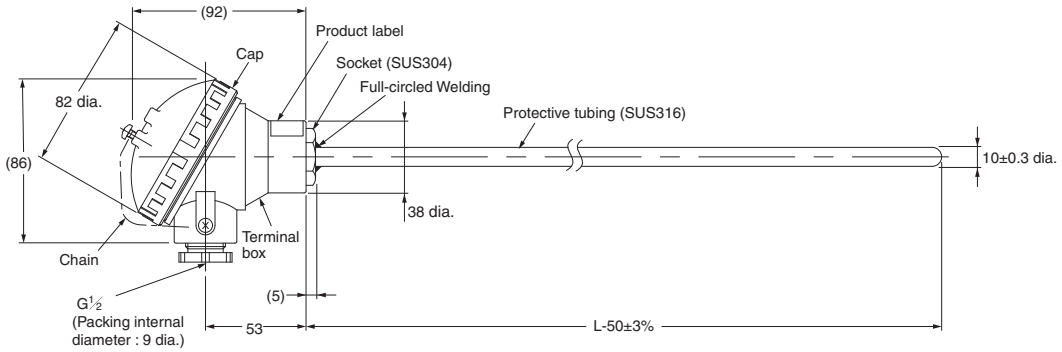

Note: 1. The length L is in centimeters, but “50” is 50 millimeters.
Therefore, for the E52-P75C-N: L = 75 (cm), the protective tubing length L – 50 = 750 – 50 = 700 mm.

Terminal box: The permissible temperature is 0°C to 90°C.

Note: The terminals in the cap indicate polarity (A, B, B).

Model Information

Terminal type	Protective tubing length L (cm)	Protective tubing diameter D (mm)
		10 dia.
		Model
Enclosed-terminal Models	30	E52-P30C-N D=10
	35	E52-P35C-N D=10
	50	E52-P50C-N D=10
	75	E52-P75C-N D=10
	100	E52-P100C-N D=10

■Model Number Legend

The type of resistance thermometer, protective tubing length, and lead length can be specified as shown below.

Thermocouples

E52-CA□□ D=□□□M□
1 2 3 4 5 6 7

1. Element type

CA:K

2. Protective tubing length (L)

Specify the length in centimeters in the following range: Unit (cm)

E52-CA□AY (Exposed-lead Model)

Diameter (D)	Length (L)
1	5, 10, 15, 20, 25, 35
1.6	5, 10, 15, 20, 25, 35, 50, 100
3.2	5, 10, 15, 20, 25, 35, 50, 100
4.8	10, 15, 20, 35, 50, 100
6.4	10, 15, 20, 35, 50, 100
8	20, 35, 50, 100

E52-CA□B-N and E52-□□C-N

Diameter (D)	Length (L)
3.2	20, 35, 50
4.8	20, 35, 50, 75
6.4	20, 35, 50, 75
8.0	35, 50, 75
10	35, 50, 75, 100
12	35, 50, 75, 100
15	35, 50, 75, 100
22	50, 75, 100

E52-CA□C-N

Diameter (D)	Length (L)
3.2	15, 20, 25, 30, 35, 50, 75, 100
4.8	15, 20, 25, 30, 35, 50, 75, 100
6.4	20, 25, 30, 35, 50, 75, 100
8.0	20, 25, 30, 35, 50, 75, 100
10	30, 35, 50, 75, 100
12	35, 50, 75, 100
15	35, 50, 75, 100
22	50, 75, 100

3. Terminal

AY: Exposed lead wires (Y-type crimp terminal for M3.5)
(element type: K)

4. Diameter

Specify the protective tubing material according to the table.

Code	Diameter (D)	Protective tubing construction	Protective tubing material
1	1 mm	Sheathed	ASTM316L
1.6	1.6 mm	Sheathed	ASTM316L
3.2	3.2 mm	Sheathed	ASTM316L
4.8	4.8 mm	Sheathed	ASTM316L
6.4	6.4 mm	Sheathed	ASTM316L
8	8 mm	Sheathed	ASTM316L
10	10 mm	Standard	SUS316
12	12 mm	Standard	SUS316
15	15 mm	Standard	SUS316
22	22 mm	Standard	SUS316

5. Heat resistance

Specify this item for the exposed-lead models only.

Code	Temperature range	Lead type
---	–20°C to 70°C Sleeve: 0°C to 70°C	Vinyl-covered
NETU	0°C to 150°C Sleeve: 0°C to 100°C	Glass-wool-covered with external shield of stainless

6. Lead length (M)

Specify the length in meters in the following range for the E52-CA□AY only.

Range: 1, 2, 4, 8 m

7. Protective tubing material

Code	Protective tubing material	Element type
---	ASTM316L	K

Examples

Element: K; protective tubing length: 1,000 mm, exposed leads, protective tubing dia.: 4.8 mm, heat resistive, lead length: 8 m
E52-CA100AY D=4.8 NETU 8M

■Model Number Legend

The type of resistance thermometer, protective tubing length, and lead length can be specified as shown below.

Thermocouples

E52-IC□□ D=□□□M□
1 2 3 4 5 6 7

1. Element type

IC: J

2. Protective tubing length (L)

Specify the length in centimeters in the following range: Unit (cm)

E52-IC□AY (Exposed-lead Model)

Diameter (D)	Length (L)
1	15, 20, 35
1.6	15, 20, 35
3.2	15, 20, 35, 50
4.8	20, 35, 50
6.4	20, 35, 50
8	20, 35, 50

E52-IC□B-N and E52-□□C-N

Diameter (D)	Length (L)
3.2	20, 35, 50
4.8	20, 35, 50, 75
6.4	20, 35, 50, 75
8.0	35, 50, 75
10	35, 50, 75, 100
12	35, 50, 75, 100
15	35, 50, 75, 100
22	50, 75, 100

E52-IC□C-N

Diameter (D)	Length (L)
3.2	20, 35, 50
4.8	20, 35, 50, 75
6.4	20, 35, 50, 75
8.0	35, 50, 75
10	35, 50, 75, 100
12	35, 50, 75, 100
15	35, 50, 75, 100
22	50, 75, 100

3. Terminal

AY: Exposed lead wires (Y-type crimp terminal for M3.5) (element type: J)

B-N: Exposed terminals (element type: J)

C-N: Enclosed terminals (element type: J)

4. Diameter

Specify the protective tubing material according to the table.

Code	Diameter (D)	Protective tubing construction	Protective tubing material
1	1 mm	Sheathed	ASTM316L
1.6	1.6 mm	Sheathed	ASTM316L
3.2	3.2 mm	Sheathed	ASTM316L
4.8	4.8 mm	Sheathed	ASTM316L
6.4	6.4 mm	Sheathed	ASTM316L
8	8 mm	Sheathed	ASTM316L
10	10 mm	Standard	SUS316
12	12 mm	Standard	SUS316
15	15 mm	Standard	SUS316
22	22 mm	Standard	SUS316

5. Heat resistance

Specify this item for the exposed-lead models only.

Code	Temperature range	Lead type
---	–20°C to 70°C Sleeve: 0°C to 70°C	Vinyl-covered
NETU	0°C to 150°C Sleeve: 0°C to 100°C	Glass-wool-covered with external shield of stainless

6. Lead length (M)

Specify the length in meters in the following range for the E52-IC□AY only.

Range: 1, 2, 4, 8 m

7. Protective tubing material

Code	Protective tubing material	Element type
---	ASTM316L	J
SUS310S	SUS310S	K, D = 10 to 22

Examples

Element: J; protective tubing length: 150 mm, exposed leads, protective tubing dia.: 1, heat resistive, lead length: 1 m
E52-IC15AY D=1 1M

■Sheathed Thermocouples

Specifications

Element type	K (CA), J(IC)
Class	JIS class 2 (0.75)
Thermal contact	Non-grounded type
Sheath material	CA: ASTM316L
	IC: ASTM316L

Permissible Temperature in Dry Air

D	Element wire	
	K (CA) ASTM316L	J (IC) ASTM316L
1 dia.	650°C	450°C
1.6 dia.	650°C	450°C
3.2 dia.	750°C	650°C
4.8 dia.	800°C	750°C
6.4 dia.	800°C	750°C
8.0 dia.	900°C	750°C

Note: For details on the permissible temperature, refer to page D-5 of Introduction of Temperature Controllers (Cat. No. H900).

Exposed-lead Models

E52-CA□AY

Dimensions

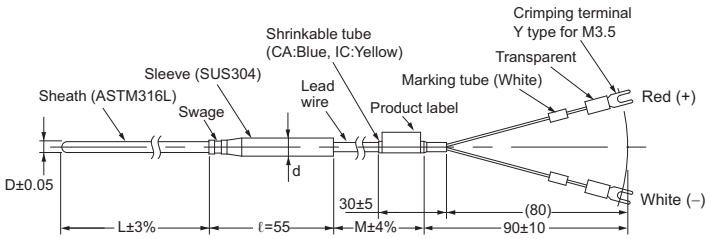

Unit (mm)

D	d	ℓ
1 dia.	8	55
1.6 dia.	8	55
3.2 dia.	8	55
4.8 dia.	8	55
6.4 dia.	11	55
8 dia.	11	55

Permissible Temperature in Dry Air

D	Element wire
	K (CA) ASTM316L
1 dia.	650°C
1.6 dia.	650°C
3.2 dia.	750°C
4.8 dia.	800°C
6.4 dia.	800°C
8.0 dia.	900°C

Note: 1. Lead Wire (Compensating Conductor)
- Standard (–20°C to 70°C):
  Fully vinyl-covered with seven 0.3-dia. conductors (0.5 mm thick) and external dimensions of 2.4 × 4.1.
- Heat Resistive (0°C to 150°C):
  Fully glass-wool-covered with seven 0.3-dia. conductors (0.5 mm thick) with external shield of stainless steel and external dimensions of 2.8 × 4.6
  The heat-resistive lead wires cannot be used in locations exposed to water or other liquids.
- Lead Wire Length (M): 1, 2, 4, or 8 m

2. The sleeve resists temperatures ranging between –20°C and 70°C for standard models and 0°C and 100°C for heat-resistive models.

K (CA) Model Information (E52-CA□AY)

Model Information

Terminal type	Protective tubing diameter D (mm)	Protective tubing length L (cm)	Lead wire type	Lead wire length M (m)			
				1	2	4	8
				Model			
Exposed-lead Models	1 dia.	5	Standard	E52-CA5AY D=1 1M	E52-CA5AY D=1 2M	E52-CA5AY D=1 4M	E52-CA5AY D=1 8M
			Heat resistive	E52-CA5AY D=1 NETU 1M	E52-CA5AY D=1 NETU 2M	E52-CA5AY D=1 NETU 4M	E52-CA5AY D=1 NETU 8M
		10	Standard	E52-CA10AY D=1 1M	E52-CA10AY D=1 2M	E52-CA10AY D=1 4M	E52-CA10AY D=1 8M
			Heat resistive	E52-CA10AY D=1 NETU 1M	E52-CA10AY D=1 NETU 2M	E52-CA10AY D=1 NETU 4M	E52-CA10AY D=1 NETU 8M
		15	Standard	E52-CA15AY D=1 1M	E52-CA15AY D=1 2M	E52-CA15AY D=1 4M	E52-CA15AY D=1 8M
			Heat resistive	E52-CA15AY D=1 NETU 1M	E52-CA15AY D=1 NETU 2M	E52-CA15AY D=1 NETU 4M	E52-CA15AY D=1 NETU 8M
		20	Standard	E52-CA20AY D=1 1M	E52-CA20AY D=1 2M	E52-CA20AY D=1 4M	E52-CA20AY D=1 8M
			Heat resistive	E52-CA20AY D=1 NETU 1M	E52-CA20AY D=1 NETU 2M	E52-CA20AY D=1 NETU 4M	E52-CA20AY D=1 NETU 8M
		25	Standard	E52-CA25AY D=1 1M	E52-CA25AY D=1 2M	E52-CA25AY D=1 4M	E52-CA25AY D=1 8M
			Heat resistive	E52-CA25AY D=1 NETU 1M	E52-CA25AY D=1 NETU 2M	E52-CA25AY D=1 NETU 4M	E52-CA25AY D=1 NETU 8M
		35	Standard	E52-CA35AY D=1 1M	E52-CA35AY D=1 2M	E52-CA35AY D=1 4M	E52-CA35AY D=1 8M
			Heat resistive	E52-CA35AY D=1 NETU 1M	E52-CA35AY D=1 NETU 2M	E52-CA35AY D=1 NETU 4M	E52-CA35AY D=1 NETU 8M
	1.6 dia.	5	Standard	E52-CA5AY D=1.6 1M	E52-CA5AY D=1.6 2M	E52-CA5AY D=1.6 4M	E52-CA5AY D=1.6 8M
			Heat resistive	E52-CA5AY D=1.6 NETU 1M	E52-CA5AY D=1.6 NETU 2M	E52-CA5AY D=1.6 NETU 4M	E52-CA5AY D=1.6 NETU 8M
		10	Standard	E52-CA10AY D=1.6 1M	E52-CA10AY D=1.6 2M	E52-CA10AY D=1.6 4M	E52-CA10AY D=1.6 8M
			Heat resistive	E52-CA10AY D=1.6 NETU 1M	E52-CA10AY D=1.6 NETU 2M	E52-CA10AY D=1.6 NETU 4M	E52-CA10AY D=1.6 NETU 8M
		15	Standard	E52-CA15AY D=1.6 1M	E52-CA15AY D=1.6 2M	E52-CA15AY D=1.6 4M	E52-CA15AY D=1.6 8M
			Heat resistive	E52-CA15AY D=1.6 NETU 1M	E52-CA15AY D=1.6 NETU 2M	E52-CA15AY D=1.6 NETU 4M	E52-CA15AY D=1.6 NETU 8M
		20	Standard	E52-CA20AY D=1.6 1M	E52-CA20AY D=1.6 2M	E52-CA20AY D=1.6 4M	E52-CA20AY D=1.6 8M
			Heat resistive	E52-CA20AY D=1.6 NETU 1M	E52-CA20AY D=1.6 NETU 2M	E52-CA20AY D=1.6 NETU 4M	E52-CA20AY D=1.6 NETU 8M
		25	Standard	E52-CA25AY D=1.6 1M	E52-CA25AY D=1.6 2M	E52-CA25AY D=1.6 4M	E52-CA25AY D=1.6 8M
			Heat resistive	E52-CA25AY D=1.6 NETU 1M	E52-CA25AY D=1.6 NETU 2M	E52-CA25AY D=1.6 NETU 4M	E52-CA25AY D=1.6 NETU 8M
		35	Standard	E52-CA35AY D=1.6 1M	E52-CA35AY D=1.6 2M	E52-CA35AY D=1.6 4M	E52-CA35AY D=1.6 8M
			Heat resistive	E52-CA35AY D=1.6 NETU 1M	E52-CA35AY D=1.6 NETU 2M	E52-CA35AY D=1.6 NETU 4M	E52-CA35AY D=1.6 NETU 8M
		50	Standard	E52-CA50AY D=1.6 1M	E52-CA50AY D=1.6 2M	E52-CA50AY D=1.6 4M	E52-CA50AY D=1.6 8M
			Heat resistive	E52-CA50AY D=1.6 NETU 1M	E52-CA50AY D=1.6 NETU 2M	E52-CA50AY D=1.6 NETU 4M	E52-CA50AY D=1.6 NETU 8M
		100	Standard	E52-CA100AY D=1.6 1M	E52-CA100AY D=1.6 2M	E52-CA100AY D=1.6 4M	E52-CA100AY D=1.6 8M
			Heat resistive	E52-CA100AY D=1.6 NETU 1M	E52-CA100AY D=1.6 NETU 2M	E52-CA100AY D=1.6 NETU 4M	E52-CA100AY D=1.6 NETU 8M
	3.2 dia.	5	Standard	E52-CA5AY D=3.2 1M	E52-CA5AY D=3.2 2M	E52-CA5AY D=3.2 4M	E52-CA5AY D=3.2 8M
			Heat resistive	E52-CA5AY D=3.2 NETU 1M	E52-CA5AY D=3.2 NETU 2M	E52-CA5AY D=3.2 NETU 4M	E52-CA5AY D=3.2 NETU 8M
		10	Standard	E52-CA10AY D=3.2 1M	E52-CA10AY D=3.2 2M	E52-CA10AY D=3.2 4M	E52-CA10AY D=3.2 8M
			Heat resistive	E52-CA10AY D=3.2 NETU 1M	E52-CA10AY D=3.2 NETU 2M	E52-CA10AY D=3.2 NETU 4M	E52-CA10AY D=3.2 NETU 8M
		15	Standard	E52-CA15AY D=3.2 1M	E52-CA15AY D=3.2 2M	E52-CA15AY D=3.2 4M	E52-CA15AY D=3.2 8M
			Heat resistive	E52-CA15AY D=3.2 NETU 1M	E52-CA15AY D=3.2 NETU 2M	E52-CA15AY D=3.2 NETU 4M	E52-CA15AY D=3.2 NETU 8M
		20	Standard	E52-CA20AY D=3.2 1M	E52-CA20AY D=3.2 2M	E52-CA20AY D=3.2 4M	E52-CA20AY D=3.2 8M
			Heat resistive	E52-CA20AY D=3.2 NETU 1M	E52-CA20AY D=3.2 NETU 2M	E52-CA20AY D=3.2 NETU 4M	E52-CA20AY D=3.2 NETU 8M
		25	Standard	E52-CA25AY D=3.2 1M	E52-CA25AY D=3.2 2M	E52-CA25AY D=3.2 4M	E52-CA25AY D=3.2 8M
			Heat resistive	E52-CA25AY D=3.2 NETU 1M	E52-CA25AY D=3.2 NETU 2M	E52-CA25AY D=3.2 NETU 4M	E52-CA25AY D=3.2 NETU 8M

Terminal type	Protective tubing diameter D (mm)	Protective tubing length L (cm)	Lead wire type	Lead wire length M (m)			
				1	2	4	8
				Model			
Exposed-lead Models	3.2 dia.	35	Standard	E52-CA35AY D=3.2 1M	E52-CA35AY D=3.2 2M	E52-CA35AY D=3.2 4M	E52-CA35AY D=3.2 8M
			Heat resistive	E52-CA35AY D=3.2 NETU 1M	E52-CA35AY D=3.2 NETU 2M	E52-CA35AY D=3.2 NETU 4M	E52-CA35AY D=3.2 NETU 8M
		50	Standard	E52-CA50AY D=3.2 1M	E52-CA50AY D=3.2 2M	E52-CA50AY D=3.2 4M	E52-CA50AY D=3.2 8M
			Heat resistive	E52-CA50AY D=3.2 NETU 1M	E52-CA50AY D=3.2 NETU 2M	E52-CA50AY D=3.2 NETU 4M	E52-CA50AY D=3.2 NETU 8M
		100	Standard	E52-CA100AY D=3.2 1M	E52-CA100AY D=3.2 2M	E52-CA100AY D=3.2 4M	E52-CA100AY D=3.2 8M
			Heat resistive	E52-CA100AY D=3.2 NETU 1M	E52-CA100AY D=3.2 NETU 2M	E52-CA100AY D=3.2 NETU 4M	E52-CA100AY D=3.2 NETU 8M
	4.8 dia.	10	Standard	E52-CA10AY D=4.8 1M	E52-CA10AY D=4.8 2M	E52-CA10AY D=4.8 4M	E52-CA10AY D=4.8 8M
			Heat resistive	E52-CA10AY D=4.8 NETU 1M	E52-CA10AY D=4.8 NETU 2M	E52-CA10AY D=4.8 NETU 4M	E52-CA10AY D=4.8 NETU 8M
		15	Standard	E52-CA15AY D=4.8 1M	E52-CA15AY D=4.8 2M	E52-CA15AY D=4.8 4M	E52-CA15AY D=4.8 8M
			Heat resistive	E52-CA15AY D=4.8 NETU 1M	E52-CA15AY D=4.8 NETU 2M	E52-CA15AY D=4.8 NETU 4M	E52-CA15AY D=4.8 NETU 8M
		20	Standard	E52-CA20AY D=4.8 1M	E52-CA20AY D=4.8 2M	E52-CA20AY D=4.8 4M	E52-CA20AY D=4.8 8M
			Heat resistive	E52-CA20AY D=4.8 NETU 1M	E52-CA20AY D=4.8 NETU 2M	E52-CA20AY D=4.8 NETU 4M	E52-CA20AY D=4.8 NETU 8M
		35	Standard	E52-CA35AY D=4.8 1M	E52-CA35AY D=4.8 2M	E52-CA35AY D=4.8 4M	E52-CA35AY D=4.8 8M
			Heat resistive	E52-CA35AY D=4.8 NETU 1M	E52-CA35AY D=4.8 NETU 2M	E52-CA35AY D=4.8 NETU 4M	E52-CA35AY D=4.8 NETU 8M
		50	Standard	E52-CA50AY D=4.8 1M	E52-CA50AY D=4.8 2M	E52-CA50AY D=4.8 4M	E52-CA50AY D=4.8 8M
			Heat resistive	E52-CA50AY D=4.8 NETU 1M	E52-CA50AY D=4.8 NETU 2M	E52-CA50AY D=4.8 NETU 4M	E52-CA50AY D=4.8 NETU 8M
		100	Standard	E52-CA100AY D=4.8 1M	E52-CA100AY D=4.8 2M	E52-CA100AY D=4.8 4M	E52-CA100AY D=4.8 8M
			Heat resistive	E52-CA100AY D=4.8 NETU 1M	E52-CA100AY D=4.8 NETU 2M	E52-CA100AY D=4.8 NETU 4M	E52-CA100AY D=4.8 NETU 8M
	6.4 dia.	10	Standard	E52-CA10AY D=6.4 1M	E52-CA10AY D=6.4 2M	E52-CA10AY D=6.4 4M	E52-CA10AY D=6.4 8M
			Heat resistive	E52-CA10AY D=6.4 NETU 1M	E52-CA10AY D=6.4 NETU 2M	E52-CA10AY D=6.4 NETU 4M	E52-CA10AY D=6.4 NETU 8M
		15	Standard	E52-CA15AY D=6.4 1M	E52-CA15AY D=6.4 2M	E52-CA15AY D=6.4 4M	E52-CA15AY D=6.4 8M
			Heat resistive	E52-CA15AY D=6.4 NETU 1M	E52-CA15AY D=6.4 NETU 2M	E52-CA15AY D=6.4 NETU 4M	E52-CA15AY D=6.4 NETU 8M
		20	Standard	E52-CA20AY D=6.4 1M	E52-CA20AY D=6.4 2M	E52-CA20AY D=6.4 4M	E52-CA20AY D=6.4 8M
			Heat resistive	E52-CA20AY D=6.4 NETU 1M	E52-CA20AY D=6.4 NETU 2M	E52-CA20AY D=6.4 NETU 4M	E52-CA20AY D=6.4 NETU 8M
		35	Standard	E52-CA35AY D=6.4 1M	E52-CA35AY D=6.4 2M	E52-CA35AY D=6.4 4M	E52-CA35AY D=6.4 8M
			Heat resistive	E52-CA35AY D=6.4 NETU 1M	E52-CA35AY D=6.4 NETU 2M	E52-CA35AY D=6.4 NETU 4M	E52-CA35AY D=6.4 NETU 8M
		50	Standard	E52-CA50AY D=6.4 1M	E52-CA50AY D=6.4 2M	E52-CA50AY D=6.4 4M	E52-CA50AY D=6.4 8M
			Heat resistive	E52-CA50AY D=6.4 NETU 1M	E52-CA50AY D=6.4 NETU 2M	E52-CA50AY D=6.4 NETU 4M	E52-CA50AY D=6.4 NETU 8M
		100	Standard	E52-CA100AY D=6.4 1M	E52-CA100AY D=6.4 2M	E52-CA100AY D=6.4 4M	E52-CA100AY D=6.4 8M
			Heat resistive	E52-CA100AY D=6.4 NETU 1M	E52-CA100AY D=6.4 NETU 2M	E52-CA100AY D=6.4 NETU 4M	E52-CA100AY D=6.4 NETU 8M
	8 dia.	20	Standard	E52-CA20AY D=8 1M	E52-CA20AY D=8 2M	E52-CA20AY D=8 4M	E52-CA20AY D=8 8M
			Heat resistive	E52-CA20AY D=8 NETU 1M	E52-CA20AY D=8 NETU 2M	E52-CA20AY D=8 NETU 4M	E52-CA20AY D=8 NETU 8M
		35	Standard	E52-CA35AY D=8 1M	E52-CA35AY D=8 2M	E52-CA35AY D=8 4M	E52-CA35AY D=8 8M
			Heat resistive	E52-CA35AY D=8 NETU 1M	E52-CA35AY D=8 NETU 2M	E52-CA35AY D=8 NETU 4M	E52-CA35AY D=8 NETU 8M
		50	Standard	E52-CA50AY D=8 1M	E52-CA50AY D=8 2M	E52-CA50AY D=8 4M	E52-CA50AY D=8 8M
			Heat resistive	E52-CA50AY D=8 NETU 1M	E52-CA50AY D=8 NETU 2M	E52-CA50AY D=8 NETU 4M	E52-CA50AY D=8 NETU 8M
		100	Standard	E52-CA100AY D=8 1M	E52-CA100AY D=8 2M	E52-CA100AY D=8 4M	E52-CA100AY D=8 8M
			Heat resistive	E52-CA100AY D=8 NETU 1M	E52-CA100AY D=8 NETU 2M	E52-CA100AY D=8 NETU 4M	E52-CA100AY D=8 NETU 8M

Exposed-lead Models

E52-IC□AY

Dimensions

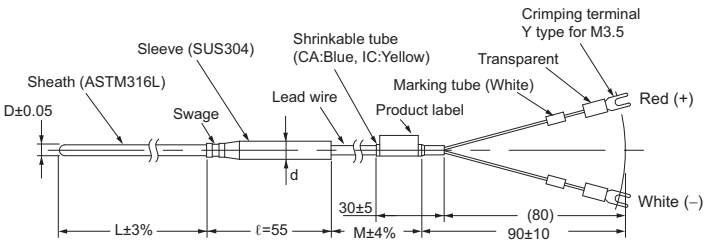

Unit (mm)

D	d	ℓ
1 dia.	8	55
1.6 dia.	8	55
3.2 dia.	8	55
4.8 dia.	8	55
6.4 dia.	11	55
8 dia.	11	55

Permissible Temperature in Dry Air

D	Element wire
	J (IC) ASTM316L
1 dia.	450°C
1.6 dia.	450°C
3.2 dia.	650°C
4.8 dia.	750°C
6.4 dia.	750°C
8.0 dia.	750°C

Note: 1. Lead Wire (Compensating Conductor)
- Standard (–20°C to 70°C):
  Fully vinyl-covered with seven 0.3-dia. conductors (0.5 mm thick) and external dimensions of 2.4 × 4.1.
- Heat Resistive (0°C to 150°C):
  Fully glass-wool-covered with seven 0.3-dia. conductors (0.5 mm thick) with external shield of stainless steel and external dimensions of 2.8 × 4.6
  The heat-resistive lead wires cannot be used in locations exposed to water or other liquids.
- Lead Wire Length (M): 1, 2, 4, or 8 m

2. The sleeve resists temperatures ranging between –20°C and 70°C for standard models and 0°C and 100°C for heat-resistive models.

J (IC) Model Information (E52-IC□AY)

Model Information

Terminal type	Protective tubing diameter D (mm)	Protective tubing length L (cm)	Lead wire type	Lead wire length M (m)		
				1	2	4
				Model		
Exposed-lead Models	1 dia.	15	Standard	E52-IC15AY D=1 1M	E52-IC15AY D=1 2M	E52-IC15AY D=1 4M
			Heat resistive	E52-IC15AY D=1 NETU 1M	E52-IC15AY D=1 NETU 2M	E52-IC15AY D=1 NETU 4M
		20	Standard	E52-IC20AY D=1 1M	E52-IC20AY D=1 2M	E52-IC20AY D=1 4M
			Heat resistive	E52-IC20AY D=1 NETU 1M	E52-IC20AY D=1 NETU 2M	E52-IC20AY D=1 NETU 4M
		35	Standard	E52-IC35AY D=1 1M	E52-IC35AY D=1 2M	E52-IC35AY D=1 4M
			Heat resistive	E52-IC35AY D=1 NETU 1M	E52-IC35AY D=1 NETU 2M	E52-IC35AY D=1 NETU 4M
	1.6 dia.	15	Standard	E52-IC15AY D=1.6 1M	E52-IC15AY D=1.6 2M	E52-IC15AY D=1.6 4M
			Heat resistive	E52-IC15AY D=1.6 NETU 1M	E52-IC15AY D=1.6 NETU 2M	E52-IC15AY D=1.6 NETU 4M
		20	Standard	E52-IC20AY D=1.6 1M	E52-IC20AY D=1.6 2M	E52-IC20AY D=1.6 4M
			Heat resistive	E52-IC20AY D=1.6 NETU 1M	E52-IC20AY D=1.6 NETU 2M	E52-IC20AY D=1.6 NETU 4M
		35	Standard	E52-IC35AY D=1.6 1M	E52-IC35AY D=1.6 2M	E52-IC35AY D=1.6 4M
			Heat resistive	E52-IC35AY D=1.6 NETU 1M	E52-IC35AY D=1.6 NETU 2M	E52-IC35AY D=1.6 NETU 4M

Terminal type	Protective tubing diameter D (mm)	Protective tubing length L (cm)	Lead wire type	Lead wire length M (m)		
				1	2	4
				Model		
Exposed-lead Models	3.2 dia.	15	Standard	E52-IC15AY D=3.2 1M	E52-IC15AY D=3.2 2M	E52-IC15AY D=3.2 4M
			Heat resistive	E52-IC15AY D=3.2 NETU 1M	E52-IC15AY D=3.2 NETU 2M	E52-IC15AY D=3.2 NETU 4M
		20	Standard	E52-IC20AY D=3.2 1M	E52-IC20AY D=3.2 2M	E52-IC20AY D=3.2 4M
			Heat resistive	E52-IC20AY D=3.2 NETU 1M	E52-IC20AY D=3.2 NETU 2M	E52-IC20AY D=3.2 NETU 4M
		35	Standard	E52-IC35AY D=3.2 1M	E52-IC35AY D=3.2 2M	E52-IC35AY D=3.2 4M
			Heat resistive	E52-IC35AY D=3.2 NETU 1M	E52-IC35AY D=3.2 NETU 2M	E52-IC35AY D=3.2 NETU 4M
		50	Standard	E52-IC50AY D=3.2 1M	E52-IC50AY D=3.2 2M	E52-IC50AY D=3.2 4M
			Heat resistive	E52-IC50AY D=3.2 NETU 1M	E52-IC50AY D=3.2 NETU 2M	E52-IC50AY D=3.2 NETU 4M
	4.8 dia.	20	Standard	E52-IC20AY D=4.8 1M	E52-IC20AY D=4.8 2M	E52-IC20AY D=4.8 4M
			Heat resistive	E52-IC20AY D=4.8 NETU 1M	E52-IC20AY D=4.8 NETU 2M	E52-IC20AY D=4.8 NETU 4M
		35	Standard	E52-IC35AY D=4.8 1M	E52-IC35AY D=4.8 2M	E52-IC35AY D=4.8 4M
			Heat resistive	E52-IC35AY D=4.8 NETU 1M	E52-IC35AY D=4.8 NETU 2M	E52-IC35AY D=4.8 NETU 4M
		50	Standard	E52-IC50AY D=4.8 1M	E52-IC50AY D=4.8 2M	E52-IC50AY D=4.8 4M
			Heat resistive	E52-IC50AY D=4.8 NETU 1M	E52-IC50AY D=4.8 NETU 2M	E52-IC50AY D=4.8 NETU 4M
	6.4 dia.	20	Standard	E52-IC20AY D=6.4 1M	E52-IC20AY D=6.4 2M	E52-IC20AY D=6.4 4M
			Heat resistive	E52-IC20AY D=6.4 NETU 1M	E52-IC20AY D=6.4 NETU 2M	E52-IC20AY D=6.4 NETU 4M
		35	Standard	E52-IC35AY D=6.4 1M	E52-IC35AY D=6.4 2M	E52-IC35AY D=6.4 4M
			Heat resistive	E52-IC35AY D=6.4 NETU 1M	E52-IC35AY D=6.4 NETU 2M	E52-IC35AY D=6.4 NETU 4M
		50	Standard	E52-IC50AY D=6.4 1M	E52-IC50AY D=6.4 2M	E52-IC50AY D=6.4 4M
			Heat resistive	E52-IC50AY D=6.4 NETU 1M	E52-IC50AY D=6.4 NETU 2M	E52-IC50AY D=6.4 NETU 4M
	8 dia.	20	Standard	E52-IC20AY D=8 1M	E52-IC20AY D=8 2M	E52-IC20AY D=8 4M
			Heat resistive	E52-IC20AY D=8 NETU 1M	E52-IC20AY D=8 NETU 2M	E52-IC20AY D=8 NETU 4M
		35	Standard	E52-IC35AY D=8 1M	E52-IC35AY D=8 2M	E52-IC35AY D=8 4M
			Heat resistive	E52-IC35AY D=8 NETU 1M	E52-IC35AY D=8 NETU 2M	E52-IC35AY D=8 NETU 4M
		50	Standard	E52-IC50AY D=8 1M	E52-IC50AY D=8 2M	E52-IC50AY D=8 4M
			Heat resistive	E52-IC50AY D=8 NETU 1M	E52-IC50AY D=8 NETU 2M	E52-IC50AY D=8 NETU 4M

Exposed-terminal Models

E52-CA□B-N
E52-IC□B-N

Dimensions

Dimensions are given in millimeters, except for the length (L), which is provided in centimeters.

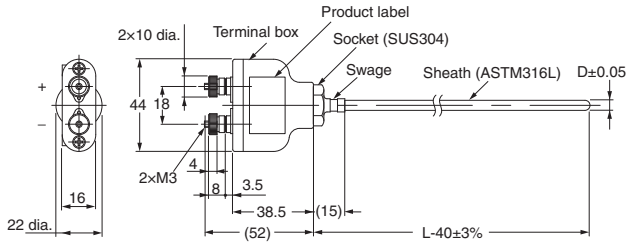

Permissible Temperature in Dry Air

D	Element wire	
	K (CA) ASTM316L	J (IC) ASTM316L
3.2 dia.	750°C	650°C
4.8 dia.	800°C	750°C
6.4 dia.	800°C	750°C
8.0 dia.	900°C	750°C

Terminal box: The permissible temperature is 0°C to 100°C.

Note: The length L is in centimeters, but “40” is 40 millimeters.
Therefore, for the E52-CA50B-N: L = 50 (cm), the sheath length L – 40 = 500 – 40 = 460 mm.

Model Information

Element type	Terminal type	Protective tubing length L (cm)	Protective tubing diameter D (mm)			
			3.2 dia.	4.8 dia.	6.4 dia.	8 dia.
			Model			
K (CA)	Exposed-terminal Models	20	E52-CA20B-N D=3.2	E52-CA20B-N D=4.8	E52-CA20B-N D=6.4	---
		35	E52-CA35B-N D=3.2	E52-CA35B-N D=4.8	E52-CA35B-N D=6.4	E52-CA35B-N D=8
		50	E52-CA50B-N D=3.2	E52-CA50B-N D=4.8	E52-CA50B-N D=6.4	E52-CA50B-N D=8
		75	---	E52-CA75B-N D=4.8	E52-CA75B-N D=6.4	E52-CA75B-N D=8
J (IC)	Exposed-terminal Models	20	E52-IC20B-N D=3.2	E52-IC20B-N D=4.8	E52-IC20B-N D=6.4	---
		35	E52-IC35B-N D=3.2	E52-IC35B-N D=4.8	E52-IC35B-N D=6.4	E52-IC35B-N D=8
		50	E52-IC50B-N D=3.2	E52-IC50B-N D=4.8	E52-IC50B-N D=6.4	E52-IC50B-N D=8
		75	---	E52-IC75B-N D=4.8	E52-IC75B-N D=6.4	E52-IC75B-N D=8

Enclosed-terminal Models

E52-CA□C-N
E52-IC□C-N

Dimensions

Dimensions are given in millimeters, except for the length (L), which is provided in centimeters.

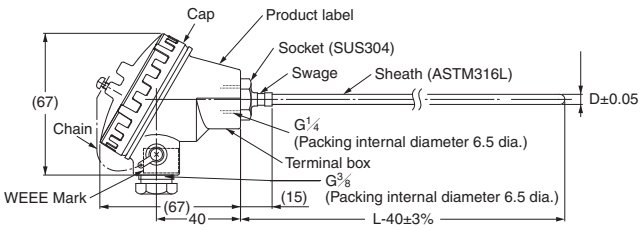

Use wiring terminals that fit M3 screws.

Permissible Temperature in Dry Air

D	Element wire	
	K (CA) ASTM316L	J (IC) ASTM316L
3.2 dia.	750°C	650°C
4.8 dia.	800°C	750°C
6.4 dia.	800°C	750°C
8.0 dia.	900°C	750°C

Terminal box: The permissible temperature is 0°C to 90°C.

Note: The terminals in the cap indicate polarity (+ or –).

Note: The length L is in centimeters, but “40” is 40 millimeters.
Therefore, for the E52-CA35C-N: L = 35 (cm), the sheath length L – 40 = 350 – 40 = 310 mm.

Model Information

Element type	Terminal type	Protective tubing length L (cm)	Protective tubing diameter D (mm)			
			3.2 dia.	4.8 dia.	6.4 dia.	8 dia.
			Model			
K (CA)	Enclosed-terminal Models	15	E52-CA15C-N D=3.2	52-CA15C-N D=4.8	---	---
		20	E52-CA20C-N D=3.2	E52-CA20C-N D=4.8	E52-CA20C-N D=6.4	E52-CA20C-N D=8
		25	E52-CA25C-N D=3.2	E52-CA25C-N D=4.8	E52-CA25C-N D=6.4	E52-CA25C-N D=8
		30	E52-CA30C-N D=3.2	E52-CA30C-N D=4.8	E52-CA30C-N D=6.4	E52-CA30C-N D=8
		35	E52-CA35C-N D=3.2	E52-CA35C-N D=4.8	E52-CA35C-N D=6.4	E52-CA35C-N D=8
		50	E52-CA50C-N D=3.2	E52-CA50C-N D=4.8	E52-CA50C-N D=6.4	E52-CA50C-N D=8
		75	E52-CA75C-N D=3.2	E52-CA75C-N D=4.8	E52-CA75C-N D=6.4	E52-CA75C-N D=8
		100	E52-CA100C-N D=3.2	E52-CA100C-N D=4.8	E52-CA100C-N D=6.4	E52-CA100C-N D=8
J (IC)	Enclosed-terminal Models	20	E52-IC20C-N D=3.2	E52-IC20C-N D=4.8	E52-IC20C-N D=6.4	---
		35	E52-IC35C-N D=3.2	E52-IC35C-N D=4.8	E52-IC35C-N D=6.4	E52-IC35C-N D=8
		50	E52-IC50C-N D=3.2	E52-IC50C-N D=4.8	E52-IC50C-N D=6.4	E52-IC50C-N D=8
		75	---	E52-IC75C-N D=4.8	E52-IC75C-N D=6.4	E52-IC75C-N D=8

■Standard Thermocouples

Specifications

Element wire	K (CA), J(IC), R(PR)	
Class	K (CA), J (IC) JIS class 2 (0.75)	
	R(PR), JIS class 2 (0.25)	
Protective tubing material	K (CA)	SUS316
	J (IC)	SUS316
	R(See note.)	JIS ceramic cat. 1 (PT1)
		JIS special ceramic (PT0)
Thermal contact	Non-grounded type	

Note: Specify PT1 or PT0 if the element is R.

Permissible Temperature in Dry Air (See note.)

D	Element wire	
	K (CA) SUS316	J (IC) SUS316
10 dia.	750°C	450°C
12 dia.	850°C	500°C
15 dia.	900°C	550°C
22 dia.	900°C	600°C

Note: For details on the permissible temperature, refer to *Technical Guide for Temperature Sensors*.

D	Element wire
	R
15 dia.	0°C to 1,400°C

Exposed-terminal Models

E52-CA□B-N
E52-IC□B-N

Dimensions

Dimensions are given in millimeters, except for the length (L), which is provided in centimeters.

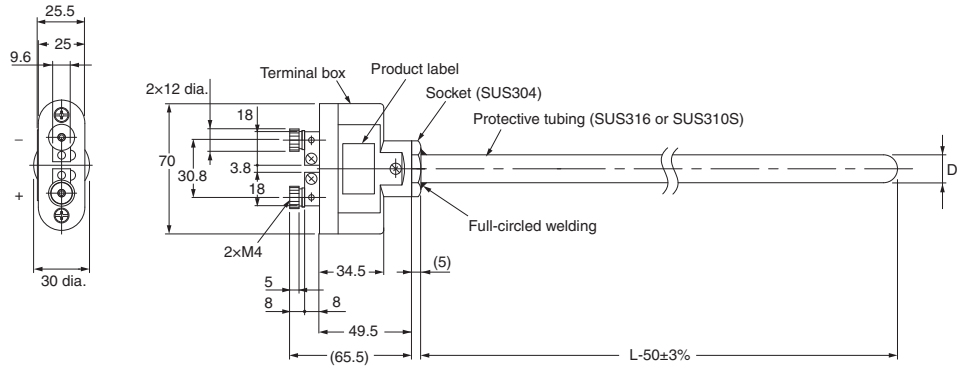

Terminal box: The permissible temperature is 0°C to 100°C.

Note: The length L is in centimeters, but "50" is 50 millimeters.
Therefore, for the E52-CA75B-N: L = 75 (cm), the protective tubing length L – 50 = 750 – 50 = 700 mm.

Permissible Temperature in Dry Air

D	Element wire	
	K (CA) SUS316	J (IC) SUS316
10 dia.	750°C	450°C
12 dia.	850°C	500°C
15 dia.	900°C	550°C
22 dia.	900°C	600°C

Model Information

Element type	Terminal type	Protective tubing length L (cm)	Protective tubing diameter D (mm)			
			10 dia.	12 dia.	15 dia.	22 dia.
			Model			
K (CA)	Exposed-terminal Models	35	E52-CA35B-N D=10	E52-CA35B-N D=12	E52-CA35B-N D=15	---
		50	E52-CA50B-N D=10	E52-CA50B-N D=12	E52-CA50B-N D=15	E52-CA50B-N D=22
		75	E52-CA75B-N D=10	E52-CA75B-N D=12	E52-CA75B-N D=15	E52-CA75B-N D=22
		100	E52-CA100B-N D=10	E52-CA100B-N D=12	E52-CA100B-N D=15	E52-CA100B-N D=22
J (IC)	Exposed-terminal Models	35	E52-IC35B-N D=10	E52-IC35B-N D=12	E52-IC35B-N D=15	---
		50	E52-IC50B-N D=10	E52-IC50B-N D=12	E52-IC50B-N D=15	E52-IC50B-N D=22
		75	E52-IC75B-N D=10	E52-IC75B-N D=12	E52-IC75B-N D=15	E52-IC75B-N D=22
		100	E52-IC100B-N D=10	E52-IC100B-N D=12	E52-IC100B-N D=15	E52-IC100B-N D=22

Enclosed-terminal Models

E52-CA□C-N
E52-IC□C-N

Dimensions

Dimensions are given in millimeters, except for the length (L), which is provided in centimeters.

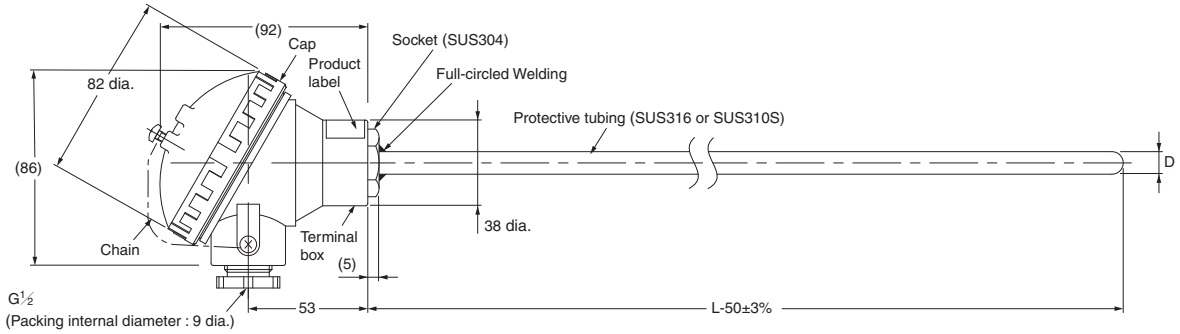

Note: The length L is in centimeters, but “50” is 50 millimeters.
Therefore, for the E52-CA50C-N: L = 50 (cm), the protective tubing length L – 50 = 500 – 50 = 450 mm.

Permissible Temperature in Dry Air

D	Element wire	
	K (CA) SUS316	J (IC) SUS316
10 dia.	0 to 750°C	0 to 450°C
12 dia.	0 to 850°C	0 to 500°C
15 dia.	0 to 850°C	0 to 550°C
22 dia.	0 to 900°C	0 to 600°C

Terminal box: The permissible temperature is 0°C to 90°C.

Note: The terminals in the cap indicate polarity (+ or –).

Model Information

Element type	Terminal type	Protective tubing length L (cm)	Protective tubing diameter D (mm)			
			10 dia.	12 dia.	15 dia.	22 dia.
			Model			
K (CA)	Enclosed-terminal Models	30	E52-CA30C-N D=10	---	---	---
		35	E52-CA35C-N D=10	E52-CA35C-N D=12	E52-CA35C-N D=15	---
		50	E52-CA50C-N D=10	E52-CA50C-N D=12	E52-CA50C-N D=15	E52-CA50C-N D=22
		75	E52-CA75C-N D=10	E52-CA75C-N D=12	E52-CA75C-N D=15	E52-CA75C-N D=22
		100	E52-CA100C-N D=10	E52-CA100C-N D=12	E52-CA100C-N D=15	E52-CA100C-N D=22
J (IC)	Enclosed-terminal Models	35	E52-IC35C-N D=10	E52-IC35C-N D=12	E52-IC35C-N D=15	---
		50	E52-IC50C-N D=10	E52-IC50C-N D=12	E52-IC50C-N D=15	E52-IC50C-N D=22
		75	E52-IC75C-N D=10	E52-IC75C-N D=12	E52-IC75C-N D=15	---
		100	E52-IC100C-N D=10	E52-IC100C-N D=12	E52-IC100C-N D=15	---

■Model Number Legend

The type of resistance thermometer, protective tubing length, and lead length can be specified as shown below.

Thermocouples

E52-PR□C-N D=15□
1 2 3 4 5

1. **Element type**
   PR: R
2. **Protective tubing length (L)**
   Specify the length in centimeters in the following range: Unit (cm)

   E52-CA□C-N

Diameter (D)	Length (L)
15	50, 75, 100

3. **Terminal**
   C-N: Enclosed terminals (element type: R)
4. **Diameter**

Code	Diameter (D)	Protective tubing construction	Protective tubing material
15	15 mm	Standard	PT1, PT0

5. **Protective tubing material**

Code	Protective tubing material	Element type
PT1	JIS ceramic Cat.1	R
PT0	JIS special ceramic	R

Enclosed-terminal Models (High-temperature Use)

E52-PR□C-N

Dimensions

Dimensions are given in millimeters, except for the length (L), which is provided in centimeters.

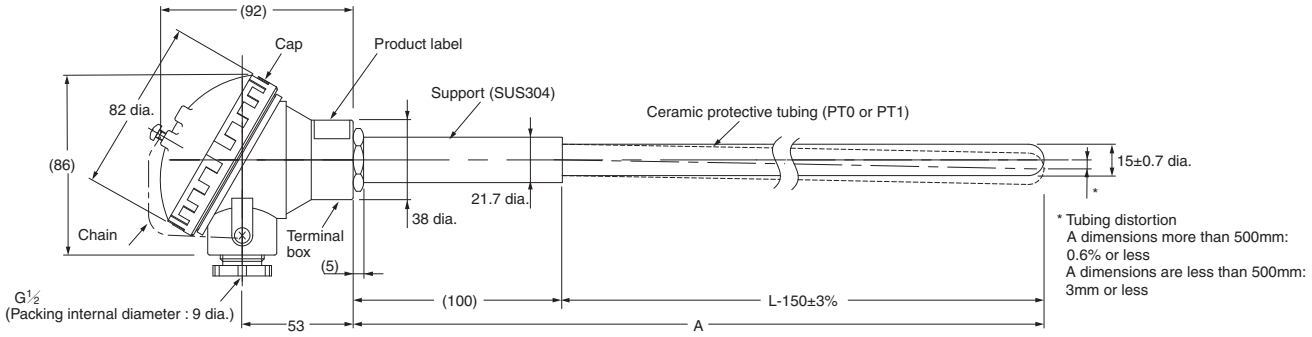

Use wiring terminals that fit M4 screws.

Permissible Temperature in Dry Air

D	Element wire
	R
15 dia.	0°C to 1,400°C

Terminal box: The permissible temperature is 0°C to 90°C.

Note: The terminals in the cap indicate polarity (+ or –).

Note: The length L is in centimeters, but "150" is 150 millimeters.
Therefore, for the E52-PR75C-N: L = 75 (cm), the protective tubing length L – 150 = 750 – 150 = 600 mm.

Model Information

Element type	Terminal type	Protective tubing length L (cm)	Protective tubing diameter D (mm)
			15 dia.
			Model
R (See note 1.)	Enclosed-terminal Models	50	E52-PR50C-N D=15 PT1
		75	E52-PR75C-N D=15 PT1
		100	E52-PR100C-N D=15 PT1
R (See note 2.)	Enclosed-terminal Models	50	E52-PR50C-N D=15 PT0
		75	E52-PR75C-N D=15 PT0
		100	E52-PR100C-N D=15 PT0

Standard	Protective tubing material	Permissible temperature in dry air
Note 1: JIS ceramic Cat.1 (PT1)	Mullite, high alumina, etc.	1,500°C (See note.)
Note 2: JIS special ceramic (PT0)	Recrystallized alumina, fused alumina, etc.	1,600°C (See note.)

Note: The permissible temperature given for the protective tubing is higher than 1,400°C, but the permissible temperature of the thermocouple element wire is only 1,400°C. Therefore, the protective tubing of the E52-PR□C-N can withstand high temperatures momentarily to the levels given in the table as exceptions, but the element wire will deteriorate quickly if the thermocouple is used regularly at temperatures that exceed the permissible temperature for the element wire.

Low-cost Models

■Low-cost Platinum Resistance Thermometers

Exposed-lead Models with Screws

Specifications

Element type	Pt100
Conductor type	3-conductor system
Class	Class B
Protective tubing material	SUS304
Sensor length	30 mm
Max. detectable temperature	250°C
Temperature range	–50°C to 250°C
Lead wire	Fluororesin-covered wire (PFA) with 1.0 outer dia. 7/0.18 –50°C to 150°C

E52-P6DY

Dimensions

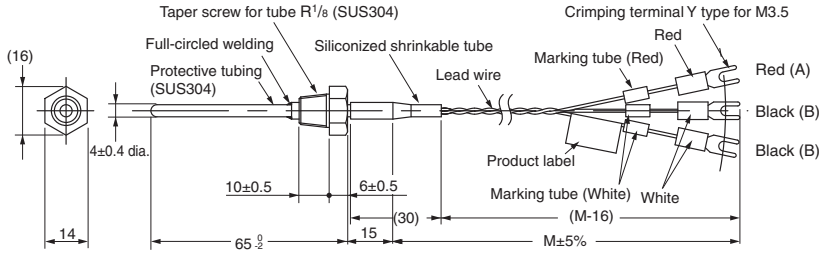

Note: The protective tubing is of pipe construction, which must not be bent.

Lead wire length (m)	Model
1	E52-P6DY 1M
2	E52-P6DY 2M
4	E52-P6DY 4M

Exposed-lead Models with Flange

Specifications

Element wire	Pt100
Conductor type	3-conductor system
Class	Class B
Protective tubing material	SUS304
Sensor length	30 mm
Max. detectable temperature	250°C
Temperature range	–50°C to 250°C
Lead wire	Fluororesin-covered wire (PFA) with 1.0 outer dia. 7/0.18 –50°C to 150°C

E52-P6FY

Dimensions

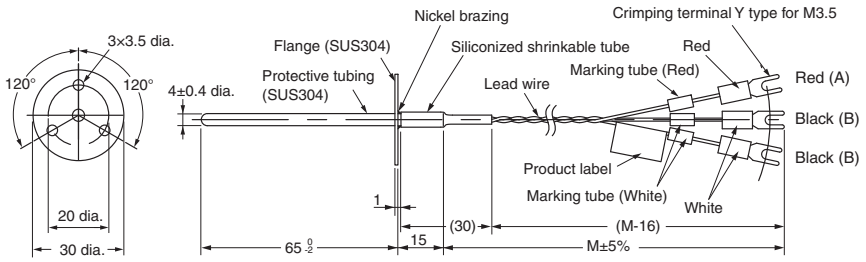

Note: The protective tubing is of pipe construction, which must not be bent.

Lead wire length (m)	Model
1	E52-P6FY 1M
2	E52-P6FY 2M
4	E52-P6FY 4M

Exposed-lead Models

Specifications

Element type	Pt100
Conductor type	3-conductor system
Class	Class B
Protective tubing material	SUS316
Max. detectable temperature	250°C
Temperature range	0°C to 250°C
Lead wire	Fluororesin-covered wire (PFA) with 1.0 outer dia. 7/0.18 –50°C to 150°C

E52-P10AEY

Dimensions

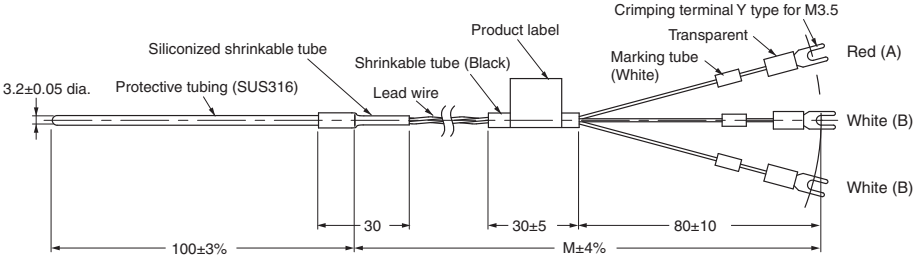

Note: 1. The protective tubing is of pipe construction, which must not be bent.
2. A Compression Fitting (PT□) cannot be used for mounting.

Lead wire length (m)	Model
1	E52-P10AEY 1M
2	E52-P10AEY 2M
4	E52-P10AEY 4M

■Low-cost Thermocouples

Exposed-lead Models with Spring

Specifications

Element type	K (CA), J (IC)
Element dia.	0.65 mm (single wire)
Class	Class 2 (0.75)
Protective tubing material	SUS304
Thermal contact	Non-grounded type
Temperature range	0°C to 400°C: K (CA) 0°C to 350°C: J (IC)
Lead wire	Fully glass-wool-covered compensating cable and external dimensions of approx. 5.1 x 3.0 4/0.65 0°C to 180°C

Note: The sleeve resists temperatures ranging between 0°C and 100°C.

E52-CA□ASY, E52-IC□ASY

Dimensions

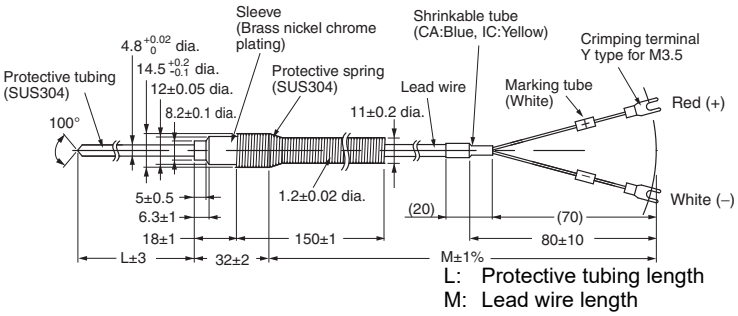

Note: The protective tubing is of pipe construction, which must not be bent.

Protective tubing length (mm)	Lead wire length (m)	Element type: K (CA)	Element type: J (IC)
		Model	
65	1	E52-CA6ASY 1M	E52-IC6ASY 1M
	2	E52-CA6ASY 2M	E52-IC6ASY 2M
	4	E52-CA6ASY 4M	E52-IC6ASY 4M
	8	E52-CA6ASY 8M	---
100	1	E52-CA10ASY 1M	E52-IC10ASY 1M
	2	E52-CA10ASY 2M	E52-IC10ASY 2M
	4	E52-CA10ASY 4M	E52-IC10ASY 4M
	8	E52-CA10ASY 8M	---
150	1	E52-CA15ASY 1M	E52-IC15ASY 1M
	2	E52-CA15ASY 2M	E52-IC15ASY 2M
	4	E52-CA15ASY 4M	E52-IC15ASY 4M
	8	E52-CA15ASY 8M	---
200	1	E52-CA20ASY 1M	E52-IC20ASY 1M
	2	E52-CA20ASY 2M	E52-IC20ASY 2M
	4	E52-CA20ASY 4M	E52-IC20ASY 4M
	8	E52-CA20ASY 8M	---

Exposed-lead Models with Screw

Specifications

Element type	K (CA), J (IC)
Element dia.	0.65 mm (single wire)
Class	Class 2 (0.75)
Protective tubing material	SUS304
Thermal contact	Grounded type
Temperature range	0°C to 400°C: K (CA) 0°C to 350°C: J (IC)
Lead wire	Fully glass-wool-covered with external copper shield and external dimensions of approx. 3.1 x 2.0 1/0.65 0°C to 180°C
Terminal shape	Y-type crimp terminal for M3.5

Note: 1. The thermocouple is a single wire from the tip to the terminal.
2. Specify the type of screw (i.e., M6, M8, or W1/4) when ordering.
3. The thermocouple is not of airtight construction.
4. OMRON recommends that the tip of the thermocouple is touching the sensing object.

Installation Example

Cut a thread into the workpiece, and screw in the thermocouple while pushing in so that the tip makes complete contact.

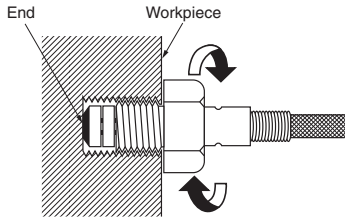

E52-CA1DY, E52-IC1DY

Dimensions

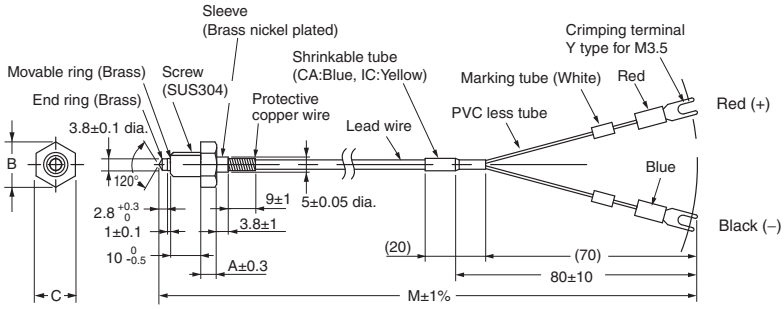

Internal Construction (E52-CA1DY)

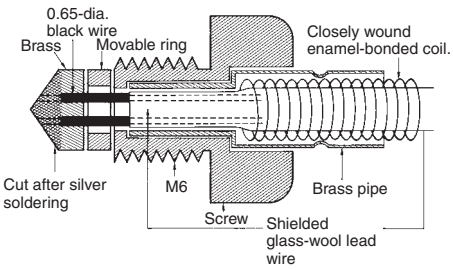

Lead wire length (m)	Screw		
	W1/4 (P=1.27)	M6 (P=1.0)	M8 (P=1.25)
A (mm)	4.3	4	5.3
B (mm)	11.5	11.5	15
C (mm)	10	10	13

Note: E52-CA1DY with the same shape and multiple element wires are also available (E52-CA1DY-40). Refer to page 34 for details.

Protective tubing length (mm)	Lead wire length (m)	Element type: K (CA)	Element type: J (IC)
		Model	
M6 screw	1	E52-CA1DY M6 1M	E52-IC1DY M6 1M
	2	E52-CA1DY M6 2M	E52-IC1DY M6 2M
	4	E52-CA1DY M6 4M	E52-IC1DY M6 4M
	8	E52-CA1DY M6 8M	---
M8 screw	1	E52-CA1DY M8 1M	E52-IC1DY M8 1M
	2	E52-CA1DY M8 2M	E52-IC1DY M8 2M
	4	E52-CA1DY M8 4M	E52-IC1DY M8 4M
	8	E52-CA1DY M8 8M	---
W1/4 screw	1	E52-CA1DY W1/4 1M	E52-IC1DY W1/4 1M
	2	E52-CA1DY W1/4 2M	E52-IC1DY W1/4 2M
	4	E52-CA1DY W1/4 4M	E52-IC1DY W1/4 4M
	8	E52-CA1DY W1/4 8M	---

Exposed-lead Models with Flange

Specifications

Element type	K (CA), J (IC)
Class	Class 2 (0.75)
Protective tubing material	SUS304
Thermal contact	Grounded type
Temperature range	0°C to 350°C: K (CA) 0°C to 350°C: J (IC)
Lead wire	Fluororesin-covered thermocouple wire (PFA) with external dimensions of 1.6 x 1.0 1/0.32 0°C to 150°C

E52-CA6F-N, E52-IC6F-N

Dimensions

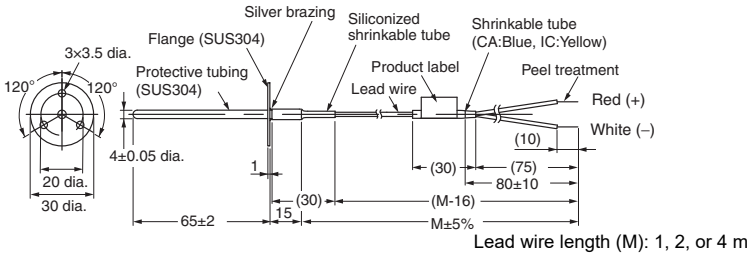

Note: 1. The thermocouple is a single wire from the tip to the terminal.
2. The protective tubing is of pipe construction, which must not be bent.
3. Do not use in locations subject to excessive vibration and shock. Doing so may cause disconnection.

Lead wire length (m)	Element type: K (CA)	Element type: J (IC)
	Model	
1	E52-CA6F-N 1M	E52-IC6F-N 1M
2	E52-CA6F-N 2M	E52-IC6F-N 2M
4	E52-CA6F-N 4M	E52-IC6F-N 4M

Specifications

Element type	K (CA)
Class	Class 2 (0.75)
Protective tubing material	SUS304
Thermal contact	Grounded type
Temperature range	0°C to 350°C: K (CA)
Lead wire	Fluororesin-covered thermocouple wire (PFA) with external dimensions of 2.5 x 1.5 1/0.65 0°C to 150°C

E52-CA6F-N-25

Dimensions

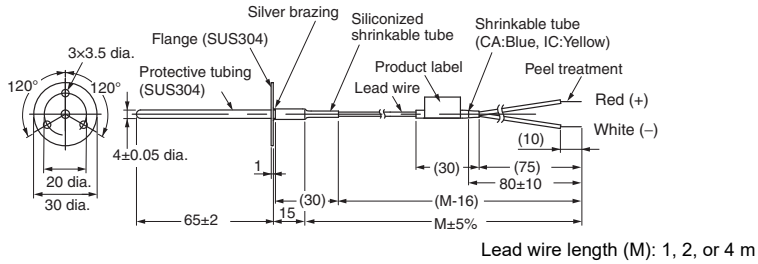

Note: 1. The thermocouple is a single wire from the tip to the terminal.
2. The protective tubing is of pipe construction, which must not be bent.

Lead wire length (m)	Element type: K (CA)
	Model
1	E52-CA6F-N-25 1M
2	E52-CA6F-N-25 2M
4	E52-CA6F-N-25 4M

Exposed-lead Models with Screws

Specifications

Element type	K (CA), J (IC)
Class	Class 2 (0.75)
Protective tubing material	SUS304
Thermal contact	Grounded type
Temperature range	0°C to 350°C: K (CA) 0°C to 350°C: J (IC)
Lead wire	Fluororesin-covered thermocouple wire (PFA) with external dimensions of 1.6 x 1.0 1/0.3 0°C to 150°C

E52-CA6D-N, E52-IC6D-N

Dimensions

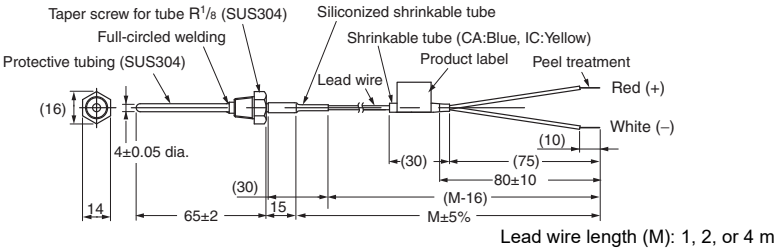

Lead wire length (M): 1, 2, or 4 m

Note: 1. The thermocouple is a single wire from the tip to the terminal.
2. The protective tubing is of pipe construction, which must not be bent.
3. Do not use in locations subject to excessive vibration and shock. Doing so may cause disconnection.

Lead wire length (m)	Element type: K (CA)	Element type: J (IC)
	Model	
1	E52-CA6D-N 1M	E52-IC6D-N 1M
2	E52-CA6D-N 2M	E52-IC6D-N 2M
4	E52-CA6D-N 4M	E52-IC6D-N 4M

Specifications

Element type	K (CA)
Class	Class 2 (0.75)
Protective tubing material	SUS304
Thermal contact	Grounded type
Temperature range	0°C to 350°C: K (CA)
Lead wire	Fluororesin-covered thermocouple wire (PFA) with external dimensions of 2.5 x 1.5 1/0.65 0°C to 150°C

E52-CA6D-N-25

Dimensions

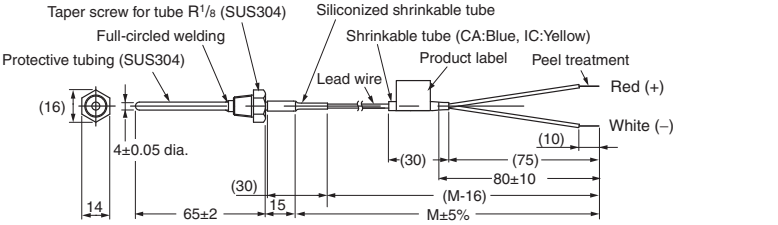

Lead wire length (M): 1, 2, or 4 m

Note: 1. The thermocouple is a single wire from the tip to the terminal.
2. The protective tubing is of pipe construction, which must not be bent.

Lead wire length (m)	Element type: K (CA)
	Model
1	E52-CA6D-N-25 D4.0 1M
2	E52-CA6D-N-25 D4.0 2M
4	E52-CA6D-N-25 D4.0 4M

Exposed-lead Models

Specifications

Element type	K (CA), J (IC)
Class	Class 2 (0.75)
Protective tubing material	SUS304
Thermal contact	Non-grounded type
Temperature range	0°C to 350°C: K (CA) 0°C to 200°C: J (IC)
Lead wire	Fluororesin-covered thermocouple wire (PFA) with external dimensions of 1.6 x 1.0 1/0.32 0°C to 180°C

E52-CA10AE-N, E52-IC10AE-N

Dimensions

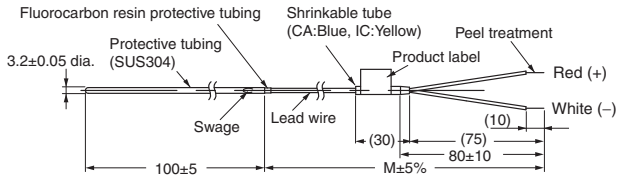

Note: 1. The thermocouple is a single wire from the tip to the terminal.
2. Lead wire length M: 1, 2, or 4 m
3. The protective tubing is of pipe construction, which must not be bent.
4. The thermocouple cannot be mounted using a PT□ Compression Fitting.

Lead wire length (m)	Element type: K (CA)	Element type: J (IC)
	Model	
1	E52-CA10AE-N 1M	E52-IC10AE-N 1M
2	E52-CA10AE-N 2M	E52-IC10AE-N 2M
4	E52-CA10AE-N 4M	E52-IC10AE-N 4M

Exclusive Models

■Thermocouples

Thermocouples for Molding Machines

Specifications

Element type	K (CA), J (IC)
Element diameter	1.0 mm (single wire)
Class	Class 2 (0.75)
Protective tubing material	SUS304
Thermal contact	Grounded type
Temperature range	0°C to 350°C
Lead wire	Glass-covered stainless steel shielded thermocouple wire with 4 dia. 1/1.0 0°C to 180°C

E52-CA2GVY, E52-IC2GVY

Dimensions

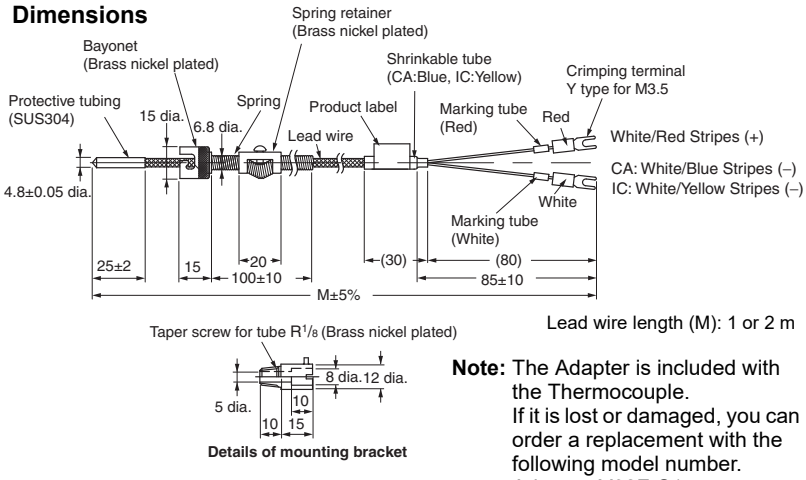

Lead wire length (M): 1 or 2 m

Note: The Adapter is included with the Thermocouple.
If it is lost or damaged, you can order a replacement with the following model number.
Adapter: Y92F-S1

Lead wire length (m)	Element type: K (CA)	Element type: J (IC)
	Model	
1	E52-CA2GVY 1M	E52-IC2GVY 1M
2	E52-CA2GVY 2M	E52-IC2GVY 2M
4	E52-CA2GVY 4M	E52-IC2GVY 4M
8	E52-CA2GVY 8M	E52-IC2GVY 8M

Thermocouples with Crimp Terminal

Specifications

Element type	K (CA), J (IC)
Element diameter	0.65 mm (single wire)
Class	Class 2 (0.75)
Thermal contact	Grounded type
Temperature range	0°C to 300°C
Lead wire	Glass-covered stainless steel shielded thermocouple wire with 4 dia. 1/1.0 0°C to 150°C
Terminal shape	Y-type crimp terminal for M3.5

Note: The E52-CA1GTY is also available with double elements. Refer to page 34 for details.

E52-CA1GTY, E52-IC1GTY

Dimensions

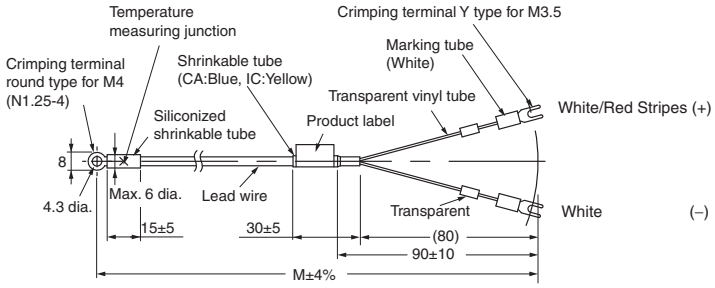

Lead wire length (M): 1 or 2 m

Lead wire length (m)	Element type: K (CA)	Element type: J (IC)
	Model	
1	E52-CA1GTY 1M	E52-IC1GTY 1M
2	E52-CA1GTY 2M	E52-IC1GTY 2M
4	E52-CA1GTY 4M	E52-IC1GTY 4M
8	E52-CA1GTY 8M	E52-IC1GTY 8M

■Platinum Resistance Thermometers

Platinum Resistance Thermometers for Surface Temperature Measurement

Specifications

Element type	Pt100
Class	Class B
Protective tubing material	SUS304 With brass-nickel-plated bracket
Conductor type	3-conductor system
Temperature range	–50°C to 250°C
Lead wire	Silicone-covered 3-conductor cable and approx. 3.9 dia. 30/0.08 –50°C to 150°C

E52-P2GSY

Dimensions

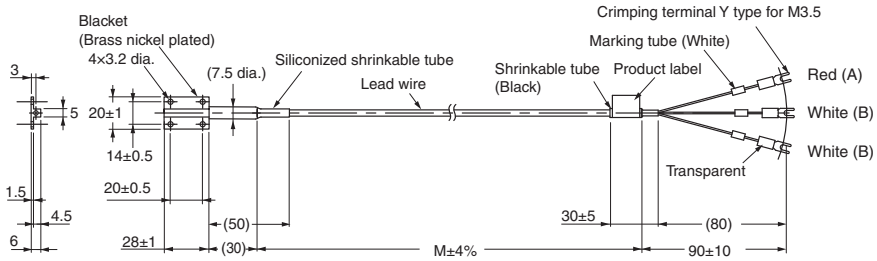

Lead wire length (M): 1 or 2 m

Lead wire length (m)	Model
1	E52-P2GSY 1M
2	E52-P2GSY 2M
4	E52-P2GSY 4M
8	E52-P2GSY 8M

Platinum Resistance Thermometers for Room Temperature Measurement

Specifications

Element type	Pt100
Class	Class B
Protective tubing material	SUS304
Conductor type	3-conductor system
Temperature range	–50°C to 60°C
Lead wire	Vinyl-covered 3-conductor cable with 6.1 dia. 20/0.18 –25°C to 60°C

E52-P10GRY

Dimensions

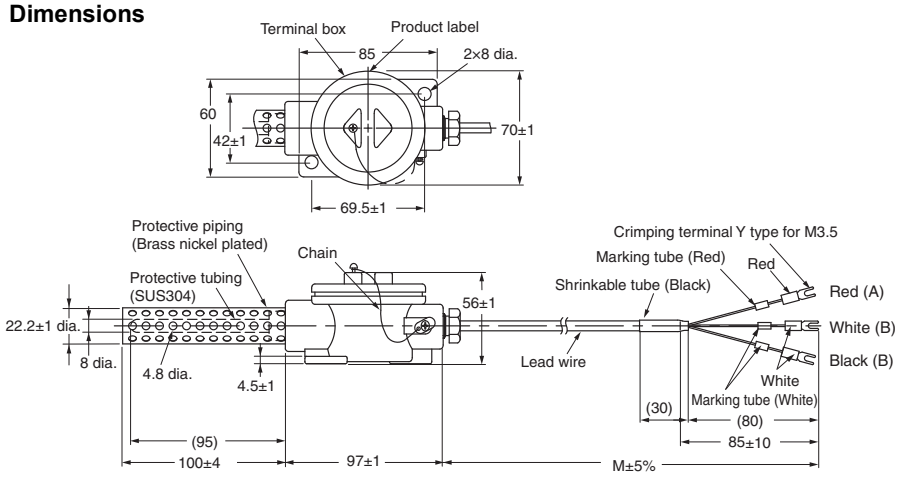

Lead wire length (m)	Model
2	E52-P10GRY 2M
4	E52-P10GRY 4M

Waterproof Platinum Resistance Thermometers

Specifications

Element wire	Pt100
Class	Class B
Protective tubing material	SUS304
Conductor type	3-conductor system
Temperature range	0°C to 70°C (underwater) –20°C to 70°C (in the air)
Lead wire	Vinyl-covered 3-conductor cable with 6.1 dia. 12/0.18 –25°C to 60°C
Resistive pressure	981 kps

E52-P10GPY

Dimensions

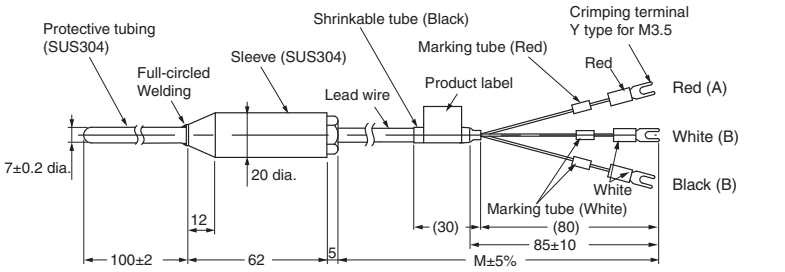

Lead wire length (M): 1 or 2 m

Note: The lead wires are vinyl-covered, and cannot be used underwater.
Use the E52-P5AY-40 if waterproof lead wires are required for use underwater.
Refer to page 29 for details.

Lead wire length (m)	Model
2	E52-P10GPY 2M
4	E52-P10GPY 4M

Corrosion-resistant Models with Fluororesin-covered Protective Tubing

■Thermocouples

Exposed-lead Models

Specifications

Element type	K (CA)
Class	Class 2 (0.75)
Protective tubing material	ASTM316L with Fluororesin-covered (FEP) tube
Thermal contact	Non-grounded type
Temperature range	0°C to 180°C
Lead wire	Vinyl-covered: –20°C to 70°C

E52-CA20AY-1

Dimensions

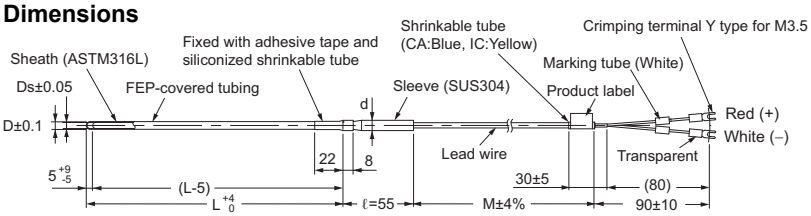

Model	Protective tubing length L (cm)	Protective tubing diameter	Sleeve diameter (mm) Sleeve length (mm)	tube thickness (mm)	Lead wire length (m)
E52-CA20AY-1 D=4.6 2M	20	D = 4.6	d = 8	0.7	0.5
E52-CA20AY-1 D=6 2M		D = 6.0	ℓ = 55	0.6	
E52-CA20AY-1 D=8 2M		D = 8.0	d = 11 ℓ = 55	0.8	

■Platinum Measurement

Exposed-lead Models

Specifications

Element type	Pt100
Class	Class B
Protective tubing material	SUS316 with Fluororesin-covered (FEP) tube
Conductor type	3-conductor system
Temperature range	–80°C to 180°C
Lead wire	Vinyl-covered: –20°C to 70°C

E52-P20AY-1

Dimensions

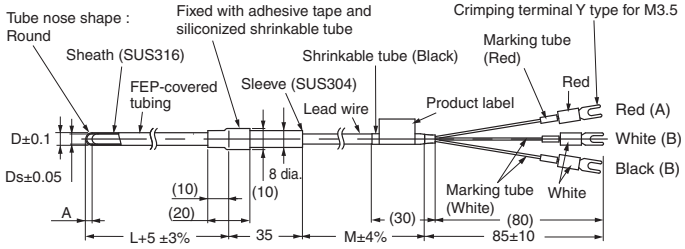

Model	Protective tubing length L (cm)	Protective tubing diameter	Sleeve diameter (mm)	Coating thickness (mm)	Lead wire length (m)
E52-P20AY-1 D=4.6 2M	20	D = 4.6	d = 8	0.7	2
E52-P20AY-1 D=6 2M		D = 6.0	d = 8	0.6	
E52-P20AY-1 D=8 2M		D = 8.0	d = 8	0.8	

FEP-molded Models (Completely Waterproof)

Specifications

Element type	Pt100
Class	Class B
Protective tubing material	Fluororesin (FEP) tube (element / fluororesin mold (FEP))
Conductor type	3-conductor system
Temperature range	–50°C to 180°C
Lead wire	Fluororesin (FEP) cover (with outer cover): –50°C to 180°C

E52-P5AY-40

Dimensions

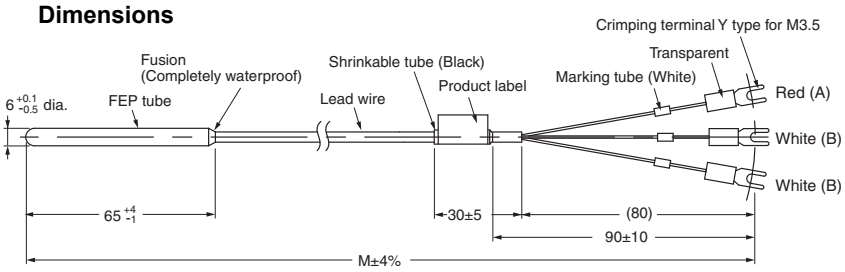

Model	Lead wire length (m)
E52-P5AY-40 2M	2
E52-P5AY-40 4M	4
E52-P5AY-40 6M	6
E52-P5AY-40 8M	8

Pressure-resistant Explosion-proof (IICT6) Models

■Thermocouples

Enclosed-terminal Models

E52-CA□□C-N-6

Dimensions

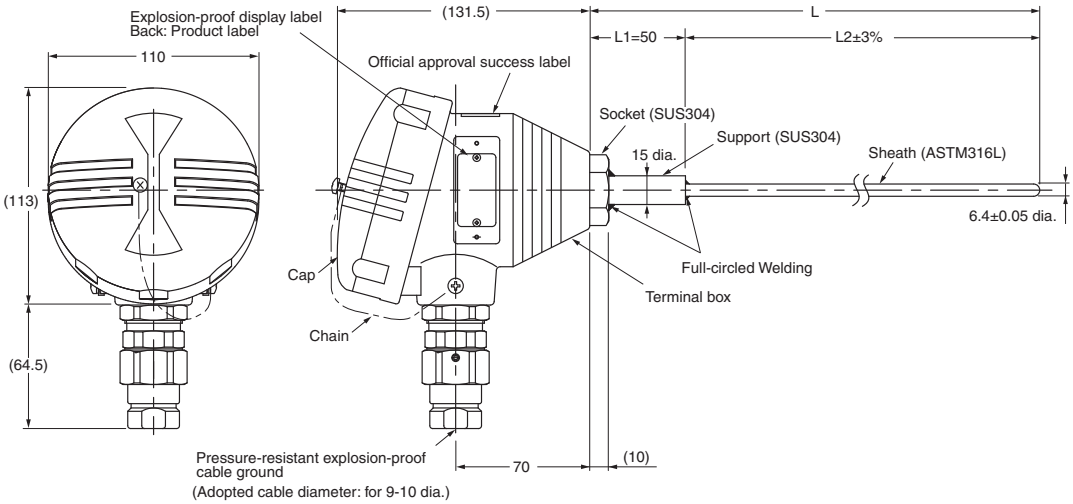

Specifications

Element type		K (CA)
Class		Class 2 (0.75) Class 3 (Level 1.5) at -40°C and under
Protective tubing material		L2 section: ASTM316L L1 section: SUS304
Explosion-proof specifications	**Construction**	Pressure-resistant explosion-proof structure
	Explosion-protected class and ignitability	IICT6
	Explosion-proof temperature range	–20°C to 85°C
	Lead wire wiring method	Pressure-resistant packing cable ground type
	Conduit thread	G1/2
	Installation method	Conforms to Technical Recommendations of the Research Institute of Industrial Safety (Japan)

Model	Protective tubing length L (cm)	Protective tubing diameter	L2 (mm)
E52-CA20C-N-6 D=6.4 L2=150	20	D = 6.4	150
E52-CA35C-N-6 D=6.4 L2=300	35	D = 6.4	300
E52-CA50C-N-6 D=6.4 L2=450	50	D = 6.4	450
E52-CA75C-N-6 D=6.4 L2=700	75	D = 6.4	700

■ Platinum Resistance Thermometers for Surface Temperature Measurement

Enclosed-terminal Models

E52-P□□C-N-6

Dimensions

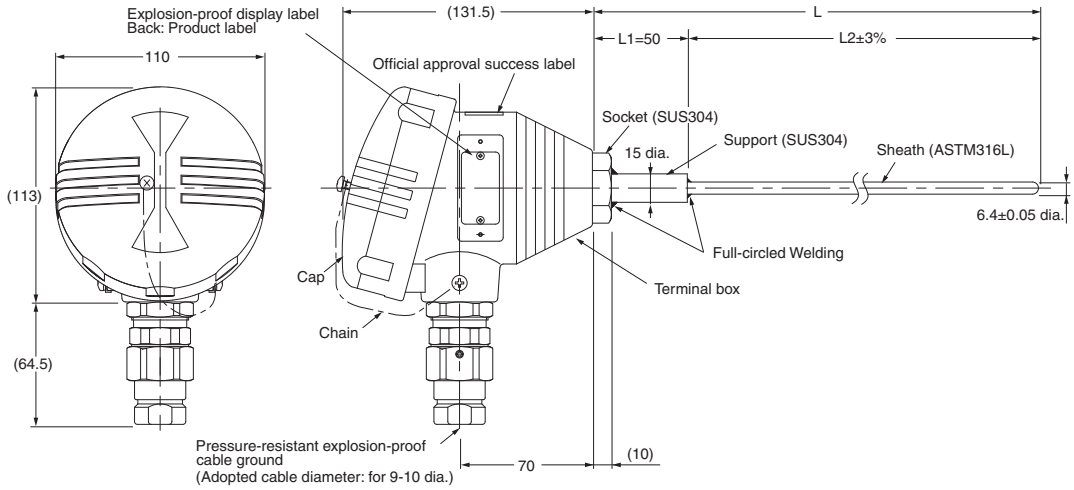

Specifications

Element type		Pt100
Class		Class B
Protective tubing material		L2 section: ASTM316L L1 section: SUS304
Explosion-proof specifications	**Construction**	Pressure-resistant explosion-proof structure
	Explosion-protected class and ignitability	IICT6
	Explosion-proof temperature range	–20°C to 85°C
	Lead wire wiring method	Pressure-resistant packing cable ground type
	Conduit thread	G1/2
	Installation method	Conforms to Technical Recommendations of the Research Institute of Industrial Safety (Japan)

Model	Protective tubing length L (cm)	Protective tubing diameter	L2 (mm)
E52-P20C-N-6 D=6.4 L2=150	20	D = 6.4	150
E52-P35C-N-6 D=6.4 L2=300	35	D = 6.4	300
E52-P50C-N-6 D=6.4 L2=450	50	D = 6.4	450
E52-P75C-N-6 D=6.4 L2=700	75	D = 6.4	700

Double-element Models

■Thermocouple

Exposed-lead Models

Specifications

Element type	K (CA)
Class	Class 2 (0.75)
Protective tubing material	ASTM316L (with sheath)
Thermal contact	Non-grounded type
Temperature range	0°C to permissible temperature limit
Lead wire	Vinyl-covered with external dimensions of 2.4 x 4.1 7/0.3 –20°C to 70°C

E52-CA20AY-7

Dimensions

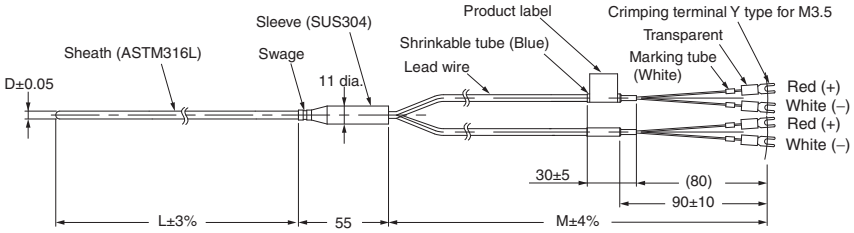

Permissible Temperature in Dry Air

D	Element wire
	K (CA) ASTM316L
3.2 dia.	750°C
4.8 dia.	800°C
6.4 dia.	800°C
8.0 dia.	900°C

Model	Protective tubing length L (cm)	Protective tubing diameter	Sleeve diameter (mm)	Permissible Temperature (°C)	Lead wire length (m)
E52-CA20AY-7 D=3.2 2M	20	D = 3.2	d = 11	750	2
E52-CA20AY-7 D=4.8 2M		D = 4.8	d = 11	800	2
E52-CA20AY-7 D=6.4 2M		D = 6.4	d = 11	800	2
E52-CA20AY-7 D=8.0 2M		D = 8.0	d = 11	900	2

■Platinum Resistance Thermometers

Exposed-lead Models

Specifications

Element type	Pt100
Class	Class B
Protective tubing material	ASTM316L (with sheath)
Conductor type	3-conductor system
Temperature range	–200°C to 450°C
Lead wire	Vinyl-covered with 6.5 dia. 19/0.18 –20°C to 70°C

E52-P20AY-7

Dimensions

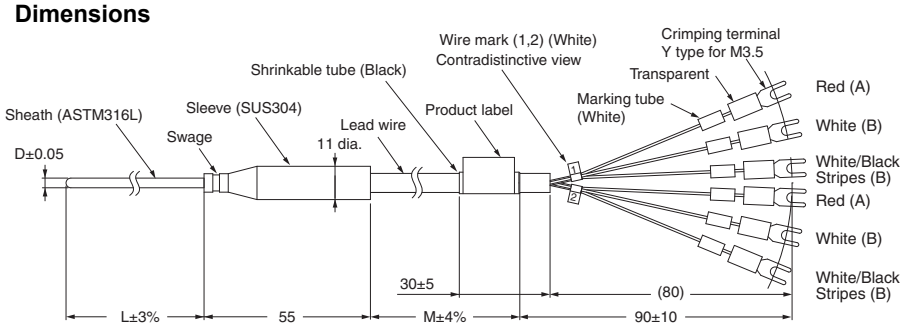

Model	Protective tubing length L (cm)	Protective tubing diameter	Lead wire length (m)
E52-P20AY-7 D=4.8 2M	20	D = 4.8	2
E52-P20AY-7 D=6.4 2M		D = 6.4	2

Enclosed-terminal Models

Specifications

Element type	Pt100
Class	Class B
Protective tubing material	ASTM316L (with sheath)
Conductor type	3-conductor system
Temperature range	–200°C to 450°C

E52-P20C-N-7

Dimensions

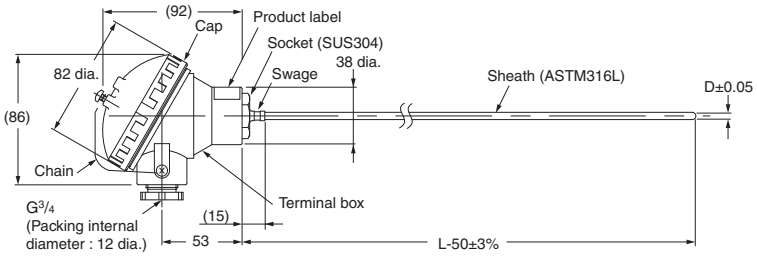

Model	Protective tubing length L (cm)	Protective tubing diameter
E52-P20C-N-7 D=4.8	20	D = 4.8
E52-P20C-N-7 D=6.4	20	D = 6.4

Note: The length L is in centimeters, but “50” is 50 millimeters.
Therefore, for the E52-P20C-N-7: L = 20 (cm), the sheath length L – 50 = 200 – 50 = 150 mm.

Silicone-covered Lead Wires Models

■Thermocouples

Exposed-lead Models with Screws

Specifications

Element type	K (CA)
Class	Class 2 (0.75)
Screw material	SUS304
Thermal contact	Grounded type
Temperature range	0°C to 300°C
Lead wire	Silicone-covered with external dimensions of 3.5 x 4.9 30/0.1 0°C to 150°C
Terminal shape	Y-type crimp terminal for M3.5

Note: Refer to the installation example for the E52-CA1DY on page 22.

E52-CA1DY-40

Dimensions

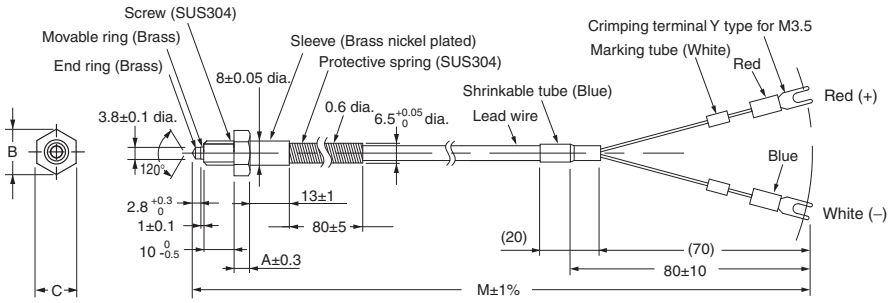

Model	Screw pitch	Lead wire length (m)
E52-CA1DY-40 M6 1M	M6 (P=1.0)	1
E52-CA1DY-40 M6 2M	M6 (P=1.0)	2
E52-CA1DY-40 M6 4M	M6 (P=1.0)	4

Thermocouples with Crimp Terminal

Specifications

Element type	K (CA)
Class	Class 2 (0.75)
Thermal contact	Grounded type
Temperature range	0°C to 200°C
Lead wire	Silicone-covered compensating cable with external dimensions of 3.2 x 4.6 30/0.1 0°C to 150°C
Terminal shape	Y-type crimp terminal for M3.5

E52-CA1GTY-14

Dimensions

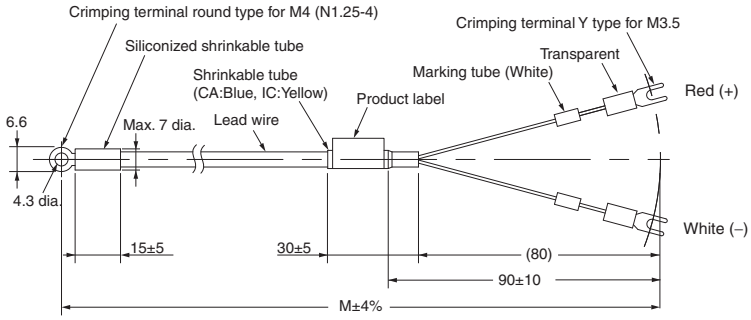

Lead wire length (M): 1 or 2 m

Model	Lead wire length (m)
E52-CA1GTY-14 1M	1
E52-CA1GTY-14 2M	2
E52-CA1GTY-14 4M	4
E52-CA1GTY-14 8M	8

Special models for Packaging Machines

■Model Number Legend

The type of protective tubing length, and lead length can be specified as shown below.

E52-CA□A Y D=1 S□ □M

Code	Element type
CA	K

Protective tubing length L (cm)
Specify the length in centimeters within the following range: Unit (cm)

Diameter (D)	Length (L)
1.0	6
1.0	12

Code	Terminal type
A	Exposed lead wires

Code	Terminal processing
Y	Y-type crimp terminals for M3.0

Code	Protective tubing diameter (D)	Protective tubing structure
D=1	1 mm	Sheathed

Code	Application
S	Temperature sensors for packaging machines

Code	Compensating conductor
1	Heat resistant (7 cores)
2	Flexible and heat resistant (30 cores)

Lead wire length M (m)
Specify the M length in meters.
Range: 0.5, 1, 2 m

Example:
Element: K, protective tubing length: 12 cm, exposed leads, Y-type crimp terminals for M3.0, protective tubing diameter: 1 mm, flexible and heat resistive, lead length: 2 m
E52-CA12AY D=1 S2 2M

Sheathed Thermocouples

Specifications

Element type	K (CA)
Class	Class 2 (0.75)
Thermal contact	Grounded type
Temperature range	0°C to 650°C

Note: Usage together with the automatic filter adjustment function of E5□D Digital Temperature Controllers is recommended.

Exposed-lead Models

E52-CA□AY

Dimensions

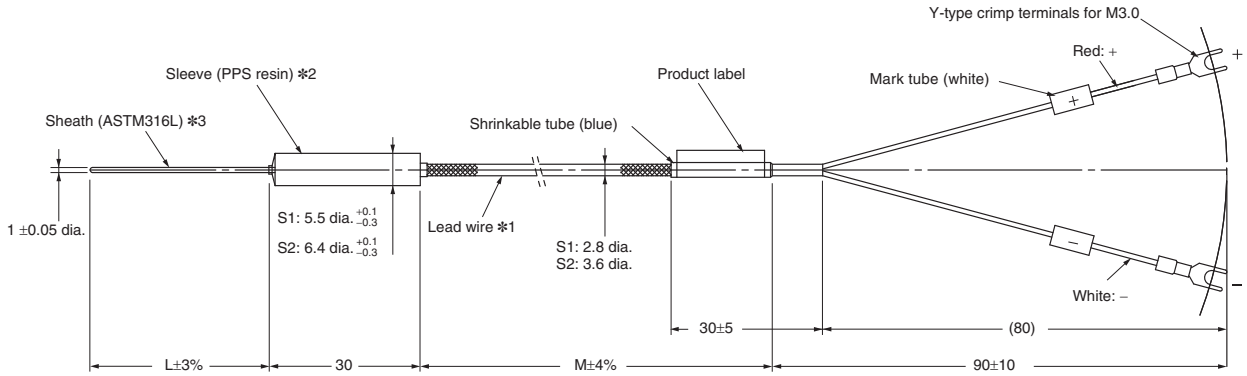

*1. Lead wires (compensating conductor) (excluding Y-type crimp terminals)
Heat-resistance model (0 to 200°C): PFA glass-wool sheath with stainless outer shield
Flexible, heat-resistance model (0 to 200°C): PFA glass-wool sheath with stainless outer shield
*2. Temperature range of sleeve: 0 to 260°C
*3. The sheath can be easily bent. Performance will not be adversely affected even if the sheath is bent somewhat.
Do not bend the sheath beyond the following value.
Minimum bending radius: 2 mm
Bendable section: 8 mm or farther from the end

List of Models

Terminal type	Protective tubing diameter D (mm)	Protective tubing length L (cm)	Lead wire type	Lead wire length M (m)		
				0.5	1	2
				Model		
Exposed-lead Models	1 dia.	6	Heat resistive	E52-CA6AY D=1 S1 0.5M	E52-CA6AY D=1 S1 1M	---
			Flexible Heat resistive	---	E52-CA6AY D=1 S2 1M	E52-CA6AY D=1 S2 2M
		12	Heat resistive	E52-CA12AY D=1 S1 0.5M	E52-CA12AY D=1 S1 1M	---
			Flexible Heat resistive	---	E52-CA12AY D=1 S2 1M	E52-CA12AY D=1 S2 2M

Installation Method

A Temperature Sensor for Packing Machines has a diameter of 1.0 mm.
To measure the temperature close to the seal surface, mount the Sensor as close as possible to the surface.

The following installation methods are assumed.

Example 1: Groove for Temperature Sensor created in heating plate and Temperature Sensor secured with mounting brackets.

Example 2: Groove for Temperature Sensor created in heating plate and Temperature Sensor secured with a cover.

Example 3: Lateral hole for the Temperature Sensor created in the heating plate and the Temperature Sensor inserted into it.

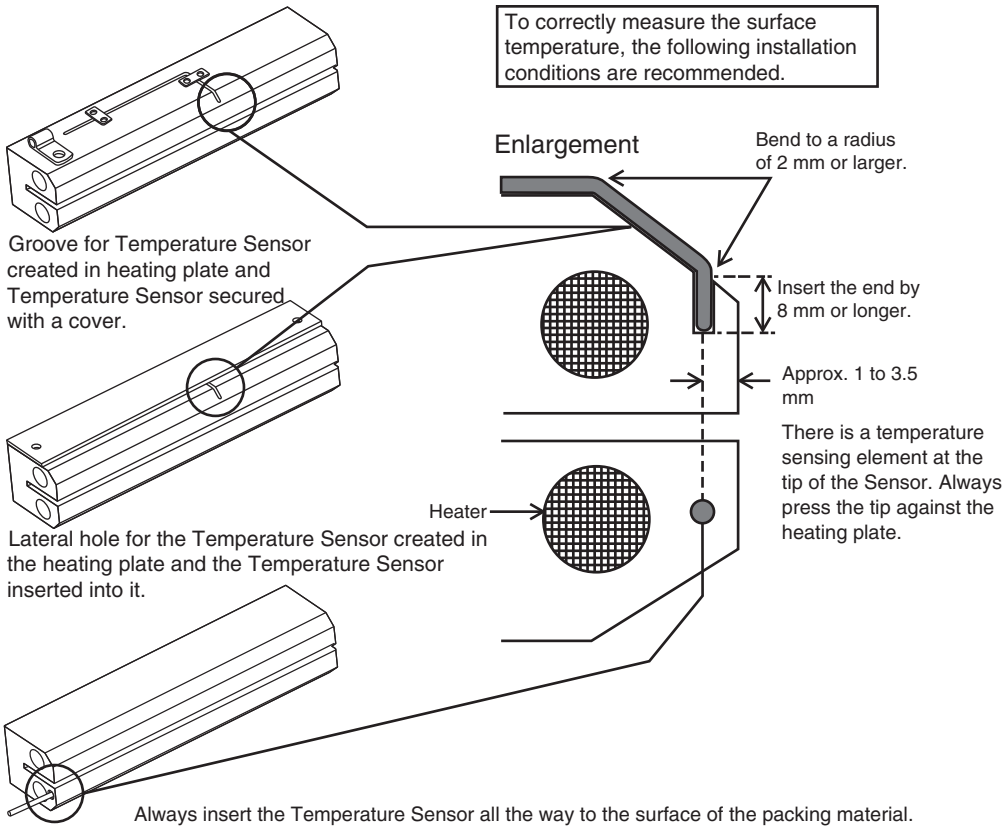

Use the following brackets or the equivalent to mount a Temperature Sensor for Packaging Machines to a hot plate.

Mounting bracket	Application	Manufacturer	Model number
(1)	1-mm-dia. protective tube bracket	Misumi Corporation	Square Shims ASFCS-series
(2)	Sleeve bracket (S1)	Misumi Corporation	Cable Clips COPU3-20P
		Digi-Key	Cable Clamp RPC1156-ND
	Sleeve bracket (S2)	Misumi Corporation	Cable Clips COPU4-20P
		Digi-Key	Cable Clamp RPC1474-ND

Note: All of the above mounting brackets are SUS304.

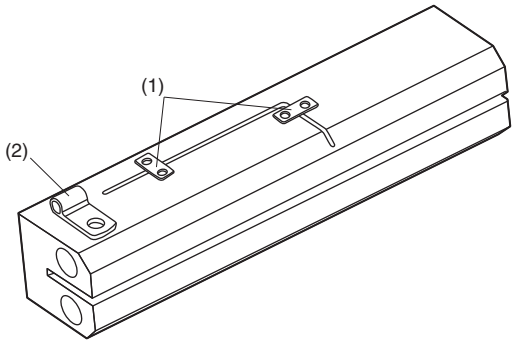

Thermistors

Element Interchangeable Thermistor for E5CS and E5C2

Temperature Ranges

Temperature range	Color code	Nominal resistance	Thermistor constant	Lead wire
–50°C to 50°C	Blue	6 kΩ (0°C)	3390K	A pair of 0.12 dia. 7 Fluororesin-insulated stranded wires with 0.86 outer dia. each
0°C to 100°C	Black	6 kΩ (0°C)	3390K	
50°C to 150°C	Red	30 kΩ (0°C)	3450K	
100°C to 200°C	Yellow	0.55 kΩ (200°C)	4300K	
150°C to 300°C	Green	4 kΩ (200°C)	5133K	Flat glass-wool-shielded lead cable with 0.12 dia. 10 conductors and external dimensions of 2.5 × 1.55

Specifications

Item	E52-THE□□
Coupling method	Element interchangeable thermistor
Class	JIS class 1
Protective tubing material	SUS304
Time constant	8 to 15 s in still water
Dissipation factor	2.4 to 2.8 mW/°C in still air
Lead wire heat resistive temperature	180°C

Error

Detectable temperature	Error
–50°C to 100°C	±1°C max.
100°C to 350°C	±1% max. of detectable temperature

Permissible Temperature

Detectable temperature	Operating temperature
–50°C to 50°C	100°C
0°C to 100°C	150°C
50°C to 150°C	200°C
100°C to 200°C	250°C
150°C to 300°C	350°C

Note: Models with non-standard lead wire length and protective tubing length are available on request.

This Thermistor is a dedicated Thermistor for the E5C2 and E5CS.

Exposed-lead Models

E52-THE5A

Dimensions

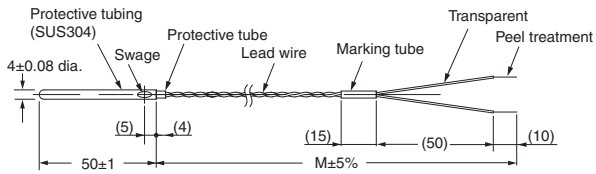

Note: The lead wires have no polarity

Temperature range	Model
–50°C to 50°C	E52-THE5A –50-50°C 1M
0°C to 100°C	E52-THE5A 0-100°C 1M
50°C to 150°C	E52-THE5A 50-150°C 1M
100°C to 200°C	E52-THE5A 100-200°C 1M
150°C to 300°C	E52-THE5A 150-300°C 1M

Exposed-lead Models with Screws

E52-THE6D

Dimensions

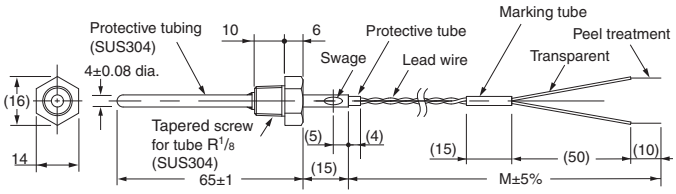

Note: The lead wires have no polarity

Temperature range	Model
–50°C to 50°C	E52-THE6D –50-50°C 1M
0°C to 100°C	E52-THE6D 0-100°C 1M
50°C to 150°C	E52-THE6D 50-150°C 1M
100°C to 200°C	E52-THE6D 100-200°C 1M
150°C to 300°C	E52-THE6D 150-300°C 1M

Exposed-lead Models with Flange

E52-THE6F

Dimensions

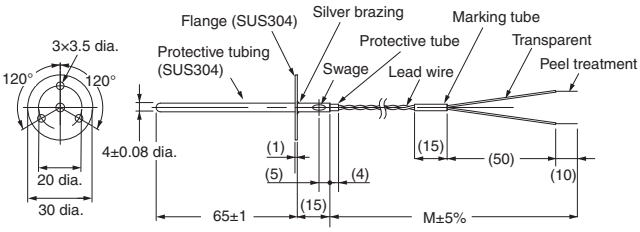

Note: The lead wires have no polarity

Temperature range	Model
–50°C to 50°C	E52-THE6F –50-50°C 1M
0°C to 100°C	E52-THE6F 0-100°C 1M
50°C to 150°C	E52-THE6F 50-150°C 1M
100°C to 200°C	E52-THE6F 100-200°C 1M
150°C to 300°C	E52-THE6F 150-300°C 1M

Note: 1. The Thermistor lead cable can be extended with a standard lead wire for extension.

2. Be sure to specify the model and temperature range when ordering the Thermistor. The Thermistor has a color code according to the temperature range.

General-purpose Models (with Ferrule)

■Model Number Legend

The type of resistance thermometer, protective tubing length, and lead length can be specified as shown below.

Platinum Resistance Thermometers

1. **Element type**
   P: Pt100
2. **Protective tubing length (L)**
   Specify the length in centimeters within the following range:
   Unit (cm)
   E52-P□AF

Diameter (D)	Length (L)
3.2	15, 20, 35
4.8	20, 35, 50

3. **Terminal**
   AF: Exposed lead wires (with Ferrule)
4. **Diameter**
   3.2: 3.2-mm dia. (Protective tubing construction: Sheathed)
   E52-P□AF only
   4.8: 4.8-mm dia. (Protective tubing construction: Sheathed)
   E52-P□AF only
5. **Heat resistance**

Code	Temperature range	Lead type
---	–20°C to 70°C Sleeve: 0°C to 70°C	Vinyl-covered
NETU	0°C to 180°C Sleeve: 0°C to 100°C	Glass-wool-covered, externally shielded with stainless

   Specify for E52-P□AF model only.
6. **Lead length (M)**
   Specify the length in meters within the following range for the E52-P□AF only:
   Range: 1, 2, 4, 8 m

Examples

Element: Pt100, protective tubing length: 150 mm, exposed leads, protective tubing dia.: 4.8 mm, heat resistive, lead length: 8 m
E52-P15AF D=4.8 NETU 8M

■Sheathed Platinum Resistance Thermometers

Refer to *Model Number Legend* above for the Pt100.

Specifications

Element type	Pt100
Class	JIS class B
Sheath material	SUS316 (E52-P□AF) ASTM316L (E52-P□B-N, E52-P□C-N)
Sheath outer diameter	3.2 dia., 4.8 dia., 6.4 dia., 8 dia
Conductor type	3-conductor system
Temperature range	–196°C to 450°C (in dry air)

Exposed-lead Models

E52-P□AF

Dimensions

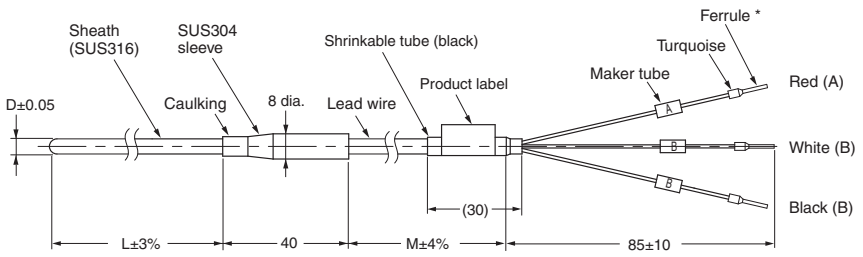

* Ferrule Dimensions
Cross-sectional diameter: 2 mm max.
Length: 9 mm max.

Lead Wire

- Standard (–20°C to 70°C):
  Fully vinyl-covered with twelve 0.18-dia conductors (0.3 mm thick) and 4.8 mm in outer dia. The sleeve resists a temperature range between 0°C and 70°C.
- Heat Resistive (0°C to 180°C):
  Fully glass-wool-covered with thirty 0.12-dia. conductors (0.3 mm thick) externally shielded with stainless steel, 4 mm in outer dia. The sleeve resists a temperature range between 0°C and 100°C.
- Lead Wire Length (M): 1, 2, 4, or 8 m

Model Information

Terminal type	Protective tubing diameter D (mm)	Protective tubing length L (cm)	Lead wire type	Lead wire length M (m)			
				1	2	4	8
				Model			
Exposed-lead Models	3.2 dia.	15	Standard	E52-P15AF D=3.2 1M	E52-P15AF D=3.2 2M	E52-P15AF D=3.2 4M	E52-P15AF D=3.2 8M
			Heat resistive	E52-P15AF D=3.2 NETU 1M	E52-P15AF D=3.2 NETU 2M	E52-P15AF D=3.2 NETU 4M	E52-P15AF D=3.2 NETU 8M
		20	Standard	E52-P20AF D=3.2 1M	E52-P20AF D=3.2 2M	E52-P20AF D=3.2 4M	E52-P20AF D=3.2 8M
			Heat resistive	E52-P20AF D=3.2 NETU 1M	E52-P20AF D=3.2 NETU 2M	E52-P20AF D=3.2 NETU 4M	E52-P20AF D=3.2 NETU 8M
		35	Standard	E52-P35AF D=3.2 1M	E52-P35AF D=3.2 2M	E52-P35AF D=3.2 4M	E52-P35AF D=3.2 8M
			Heat resistive	E52-P35AF D=3.2 NETU 1M	E52-P35AF D=3.2 NETU 2M	E52-P35AF D=3.2 NETU 4M	E52-P35AF D=3.2 NETU 8M
	4.8 dia.	20	Standard	E52-P20AF D=4.8 1M	E52-P20AF D=4.8 2M	E52-P20AF D=4.8 4M	E52-P20AF D=4.8 8M
			Heat resistive	E52-P20AF D=4.8 NETU 1M	E52-P20AF D=4.8 NETU 2M	E52-P20AF D=4.8 NETU 4M	E52-P20AF D=4.8 NETU 8M
		35	Standard	E52-P35AF D=4.8 1M	E52-P35AF D=4.8 2M	E52-P35AF D=4.8 4M	E52-P35AF D=4.8 8M
			Heat resistive	E52-P35AF D=4.8 NETU 1M	E52-P35AF D=4.8 NETU 2M	E52-P35AF D=4.8 NETU 4M	E52-P35AF D=4.8 NETU 8M
		50	Standard	E52-P50AF D=4.8 1M	E52-P50AF D=4.8 2M	E52-P50AF D=4.8 4M	E52-P50AF D=4.8 8M
			Heat resistive	E52-P50AF D=4.8 NETU 1M	E52-P50AF D=4.8 NETU 2M	E52-P50AF D=4.8 NETU 4M	E52-P50AF D=4.8 NETU 8M

■Model Number Legend

The type of resistance thermometer, protective tubing length, and lead length can be specified as shown below.

Thermocouples

1. Element type

CA:K

2. Protective tubing length (L)

Specify the length in centimeters in the following range: Unit (cm)

E52-CA□AF (Exposed-lead Model)

Diameter (D)	Length (L)
1	15, 20, 35
1.6	15, 20, 35
3.2	15, 20, 35, 50
4.8	20, 35, 50

3. Terminal

AF: Exposed lead wires (with Ferrule) (element type: K, J)

4. Diameter

Specify the protective tubing material according to the table.

Code	Diameter (D)	Protective tubing construction	Protective tubing material
1	1 mm	Sheathed	ASTM316L
1.6	1.6 mm	Sheathed	ASTM316L
3.2	3.2 mm	Sheathed	ASTM316L
4.8	4.8 mm	Sheathed	ASTM316L

5. Heat resistance

Specify this item for the exposed-lead models only.

Code	Temperature range	Lead type
---	–20°C to 70°C Sleeve: 0°C to 70°C	Vinyl-covered
NETU	0°C to 150°C Sleeve: 0°C to 100°C	Glass-wool-covered with external shield of stainless

6. Lead length (M)

Specify the length in meters in the following range for the E52-CA□AF only.

Range: 1, 2, 4, 8 m

7. Protective tubing material

Code	Protective tubing material	Element type
---	ASTM316L	K

Examples

Element: K; protective tubing length: 500 mm, exposed leads, protective tubing dia.: 4.8 mm, heat resistive, lead length: 8 m

E52-CA50AF D=4.8 NETU 8M

■Sheathed Thermocouples

Specifications

Element type	K (CA)
Class	JIS class 2 (0.75)
Thermal contact	Non-grounded type
Sheath material	CA: ASTM316L
	IC: ASTM316L

Permissible Temperature in Dry Air

D	Element wire
	K (CA) ASTM316L
1 dia.	650°C
1.6 dia.	650°C
3.2 dia.	750°C
4.8 dia.	800°C

Note: For details on the permissible temperature, refer to page D-5 of Introduction of Temperature Controllers (Cat. No. H900).

Exposed-lead Models

E52-CA□AF

Dimensions

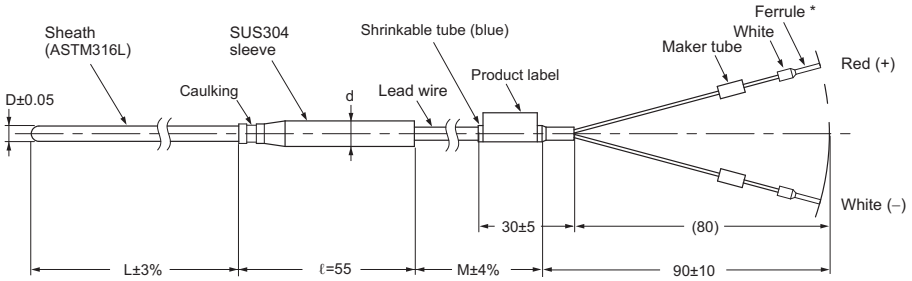

* Ferrule Dimensions
Cross-sectional diameter: 2 mm max.
Length: 9 mm max.

Note: 1. Lead Wire (Compensating Conductor)
- Standard (–20°C to 70°C):
  Fully vinyl-covered with seven 0.3-dia. conductors (0.5 mm thick) and external dimensions of 2.4 × 4.1.
- Heat Resistive (0°C to 150°C):
  Fully glass-wool-covered with seven 0.3-dia. conductors (0.5 mm thick) with external shield of stainless steel and external dimensions of 2.8 × 4.6
  The heat-resistive lead wires cannot be used in locations exposed to water or other liquids.
- Lead Wire Length (M): 1, 2, 4, or 8 m

2. The sleeve resists temperatures ranging between –20°C and 70°C for standard models and 0°C and 100°C for heat-resistive models.

Unit (mm)

D	d	ℓ
1 dia.	8	55
1.6 dia.	8	55
3.2 dia.	8	55
4.8 dia.	8	55

Permissible Temperature in Dry Air

D	Element wire
	J (IC) ASTM316L
1 dia.	450°C
1.6 dia.	450°C
3.2 dia.	650°C
4.8 dia.	750°C

K (CA) Model Information (E52-CA□AF)

Model Information

Terminal type	Protective tubing diameter D (mm)	Protective tubing length L (cm)	Lead wire type	Lead wire length M (m)			
				1	2	4	8
				Model			
Exposed-lead Models	1 dia.	15	Standard	E52-CA15AF D=1 1M	E52-CA15AF D=1 2M	E52-CA15AF D=1 4M	E52-CA15AF D=1 8M
			Heat resistive	E52-CA15AF D=1 NETU 1M	E52-CA15AF D=1 NETU 2M	E52-CA15AF D=1 NETU 4M	E52-CA15AF D=1 NETU 8M
		20	Standard	E52-CA20AF D=1 1M	E52-CA20AF D=1 2M	E52-CA20AF D=1 4M	E52-CA20AF D=1 8M
			Heat resistive	E52-CA20AF D=1 NETU 1M	E52-CA20AF D=1 NETU 2M	E52-CA20AF D=1 NETU 4M	E52-CA20AF D=1 NETU 8M
		35	Standard	E52-CA35AF D=1 1M	E52-CA35AF D=1 2M	E52-CA35AF D=1 4M	E52-CA35AF D=1 8M
			Heat resistive	E52-CA35AF D=1 NETU 1M	E52-CA35AF D=1 NETU 2M	E52-CA35AF D=1 NETU 4M	E52-CA35AF D=1 NETU 8M
	1.6 dia.	15	Standard	E52-CA15AF D=1.6 1M	E52-CA15AF D=1.6 2M	E52-CA15AF D=1.6 4M	E52-CA15AF D=1.6 8M
			Heat resistive	E52-CA15AF D=1.6 NETU 1M	E52-CA15AF D=1.6 NETU 2M	E52-CA15AF D=1.6 NETU 4M	E52-CA15AF D=1.6 NETU 8M
		20	Standard	E52-CA20AF D=1.6 1M	E52-CA20AF D=1.6 2M	E52-CA20AF D=1.6 4M	E52-CA20AF D=1.6 8M
			Heat resistive	E52-CA20AF D=1.6 NETU 1M	E52-CA20AF D=1.6 NETU 2M	E52-CA20AF D=1.6 NETU 4M	E52-CA20AF D=1.6 NETU 8M
		35	Standard	E52-CA35AF D=1.6 1M	E52-CA35AF D=1.6 2M	E52-CA35AF D=1.6 4M	E52-CA35AF D=1.6 8M
			Heat resistive	E52-CA35AF D=1.6 NETU 1M	E52-CA35AF D=1.6 NETU 2M	E52-CA35AF D=1.6 NETU 4M	E52-CA35AF D=1.6 NETU 8M
Exposed-lead Models	3.2 dia.	15	Standard	E52-CA15AF D=3.2 1M	E52-CA15AF D=3.2 2M	E52-CA15AF D=3.2 4M	E52-CA15AF D=3.2 8M
			Heat resistive	E52-CA15AF D=3.2 NETU 1M	E52-CA15AF D=3.2 NETU 2M	E52-CA15AF D=3.2 NETU 4M	E52-CA15AF D=3.2 NETU 8M
		20	Standard	E52-CA20AF D=3.2 1M	E52-CA20AF D=3.2 2M	E52-CA20AF D=3.2 4M	E52-CA20AF D=3.2 8M
			Heat resistive	E52-CA20AF D=3.2 NETU 1M	E52-CA20AF D=3.2 NETU 2M	E52-CA20AF D=3.2 NETU 4M	E52-CA20AF D=3.2 NETU 8M
		35	Standard	E52-CA35AF D=3.2 1M	E52-CA35AF D=3.2 2M	E52-CA35AF D=3.2 4M	E52-CA35AF D=3.2 8M
			Heat resistive	E52-CA35AF D=3.2 NETU 1M	E52-CA35AF D=3.2 NETU 2M	E52-CA35AF D=3.2 NETU 4M	E52-CA35AF D=3.2 NETU 8M
		50	Standard	E52-CA50AF D=3.2 1M	E52-CA50AF D=3.2 2M	E52-CA50AF D=3.2 4M	E52-CA50AF D=3.2 8M
			Heat resistive	E52-CA50AF D=3.2 NETU 1M	E52-CA50AF D=3.2 NETU 2M	E52-CA50AF D=3.2 NETU 4M	E52-CA50AF D=3.2 NETU 8M
	4.8 dia.	20	Standard	E52-CA20AF D=4.8 1M	E52-CA20AF D=4.8 2M	E52-CA20AF D=4.8 4M	E52-CA20AF D=4.8 8M
			Heat resistive	E52-CA20AF D=4.8 NETU 1M	E52-CA20AF D=4.8 NETU 2M	E52-CA20AF D=4.8 NETU 4M	E52-CA20AF D=4.8 NETU 8M
		35	Standard	E52-CA35AF D=4.8 1M	E52-CA35AF D=4.8 2M	E52-CA35AF D=4.8 4M	E52-CA35AF D=4.8 8M
			Heat resistive	E52-CA35AF D=4.8 NETU 1M	E52-CA35AF D=4.8 NETU 2M	E52-CA35AF D=4.8 NETU 4M	E52-CA35AF D=4.8 NETU 8M
		50	Standard	E52-CA50AF D=4.8 1M	E52-CA50AF D=4.8 2M	E52-CA50AF D=4.8 4M	E52-CA50AF D=4.8 8M
			Heat resistive	E52-CA50AF D=4.8 NETU 1M	E52-CA50AF D=4.8 NETU 2M	E52-CA50AF D=4.8 NETU 4M	E52-CA50AF D=4.8 NETU 8M

Low-cost Models (with Ferrule)

■Low-cost Platinum Resistance Thermometers

Exposed-lead Models with Screws

Specifications

Element type	Pt100
Conductor type	3-conductor system
Class	Class B
Protective tubing material	SUS304
Sensor length	30 mm
Max. detectable temperature	250°C
Temperature range	–50°C to 250°C
Lead wire	Fluororesin-covered wire (PFA) and approx. 1.0 dia. 7/0.18 –50°C to 150°C

E52-P6DF

Dimensions

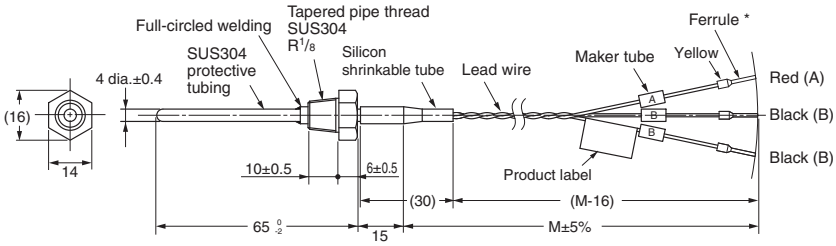

Note: The protective tubing is of pipe construction, which must not be bent.

Lead wire length (m)	Model
1	E52-P6DF 1M
2	E52-P6DF 2M
4	E52-P6DF 4M

* Ferrule Dimensions
Cross-sectional diameter: 2 mm max.
Length: 9 mm max.

Exposed-lead Models with Flange

Specifications

Element wire	Pt100
Conductor type	3-conductor system
Class	Class B
Protective tubing material	SUS304
Sensor length	30 mm
Max. detectable temperature	250°C
Temperature range	–50°C to 250°C
Lead wire	Fluororesin-covered wire (PFA) and approx. 1.0 dia. 7/0.18 –50°C to 150°C

E52-P6FF

Dimensions

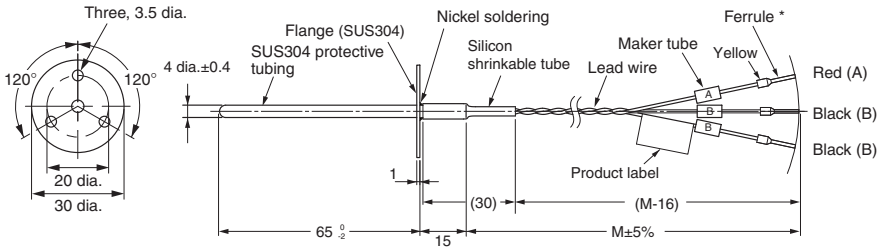

Note: The protective tubing is of pipe construction, which must not be bent.

Lead wire length (m)	Model
1	E52-P6FF 1M
2	E52-P6FF 2M
4	E52-P6FF 4M

* Ferrule Dimensions
Cross-sectional diameter: 2 mm max.
Length: 9 mm max.

Exposed-lead Models

Specifications

Element type	Pt100
Conductor type	3-conductor system
Class	Class B
Protective tubing material	SUS316
Max. detectable temperature	250°C
Temperature range	0°C to 250°C
Lead wire	Fluororesin-covered wire (PFA) and approx. 1.0 dia. 7/0.2 –50°C to 150°C

E52-P10AEF

Dimensions

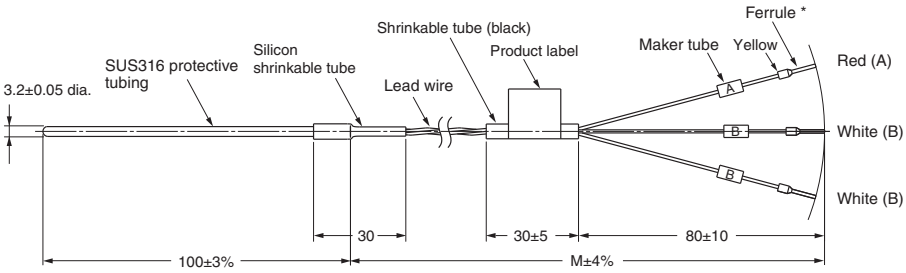

Note: 1. The protective tubing is of pipe construction, which must not be bent.
2. A Compression Fitting (PT□) cannot be used for mounting.

Lead wire length (m)	Model
1	E52-P10AEF 1M
2	E52-P10AEF 2M
4	E52-P10AEF 4M

* Ferrule Dimensions
Cross-sectional diameter: 1.5 mm max.
Length: 9 mm max.

■Low-cost Thermocouples

Exposed-lead Models with Screw

Specifications

Element type	K (CA)
Element dia.	0.65 mm (single wire)
Class	Class 2 (0.75)
Protective tubing material	SUS304
Thermal contact	Grounded type
Temperature range	0°C to 400°C: K (CA)
Lead wire	Fully glass-wool-covered with external copper shield and external dimensions of approx. 3.1 x 2.0 1/0.65 0°C to 180°C
Terminal shape	Ferrule

Note: 1. The thermocouple is a single wire from the tip to the terminal.
2. Specify the type of screw (i.e., M6, M8, or W1/4) when ordering.
3. The thermocouple is not of airtight construction.
4. OMRON recommends that the tip of the thermocouple is touching the sensing object.

Installation Example

Cut a thread into the workpiece, and screw in the thermocouple while pushing in so that the tip makes complete contact.

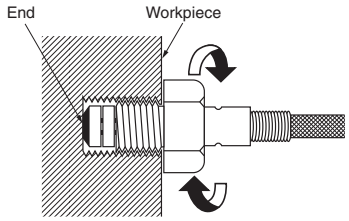

E52-CA1DF

Dimensions

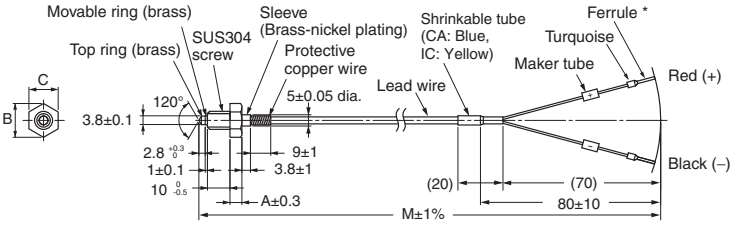

* Ferrule Dimensions
Cross-sectional diameter: 1.5 mm max.
Length: 9 mm max.

Internal Construction (E52-CA1DF)

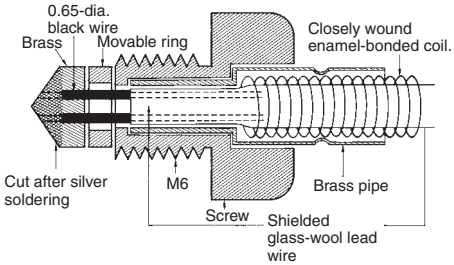

Lead wire length (m)	Screw		
	W1/4 (P=1.27)	M6 (P=1.0)	M8 (P=1.25)
A (mm)	4.3	4	5.3
B (mm)	11.5	11.5	15
C (mm)	10	10	13

Note: E52-CA1DF with the same shape and multiple element wires are also available (E52-CA1DF-40). Refer to page 50 for details.

Protective tubing length (mm)	Lead wire length (m)	Element type: K (CA)
		Model
M6 screw	1	E52-CA1DF M6 1M
	2	E52-CA1DF M6 2M
	4	E52-CA1DF M6 4M
M8 screw	1	E52-CA1DF M8 1M
	2	E52-CA1DF M8 2M
	4	E52-CA1DF M8 4M
W1/4 screw	1	E52-CA1DF W1/4 1M
	2	E52-CA1DF W1/4 2M
	4	E52-CA1DF W1/4 4M

Exclusive Models (with Ferrule)

■Thermocouples

Thermocouples for Molding Machines

Specifications

Element type	K (CA)
Element diameter	1.0 mm (single wire)
Class	Class 2 (0.75)
Protective tubing material	SUS304
Thermal contact	Grounded type
Temperature range	0°C to 350°C
Lead wire	Glass-covered stainless steel shielded thermocouple wire with 4 dia. 1/1.0 0°C to 180°C

E52-CA2GVF

Dimensions

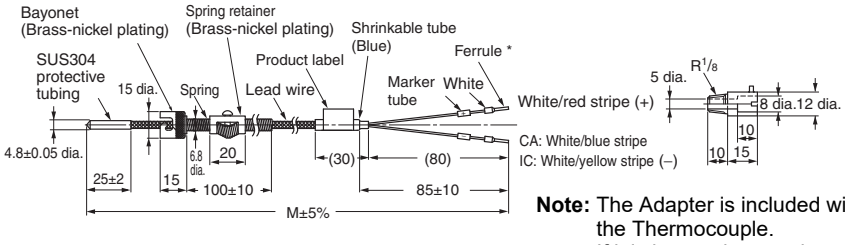

Lead wire length (m)	Element type: K (CA)
	Model
1	E52-CA2GVF 1M
2	E52-CA2GVF 2M

Note: The Adapter is included with the Thermocouple.
If it is lost or damaged, you can order a replacement with the following model number.
Adapter: Y92F-S1

* Ferrule Dimensions
Cross-sectional diameter: 2 mm max.
Length: 9 mm max.

Thermocouples with Crimp Terminal

Specifications

Element type	K (CA)
Element diameter	0.65 mm (single wire)
Class	Class 2 (0.75)
Thermal contact	Grounded type
Temperature range	0°C to 300°C
Lead wire	Glass-wool-braided shield with maximum external dimensions of 2.6 x 4.0 1/0.65 0°C to 150°C
Terminal shape	Ferrule

Note: The E52-CA1GTF is also available with double elements. Refer to page 50 for details.

E52-CA1GTF

Dimensions

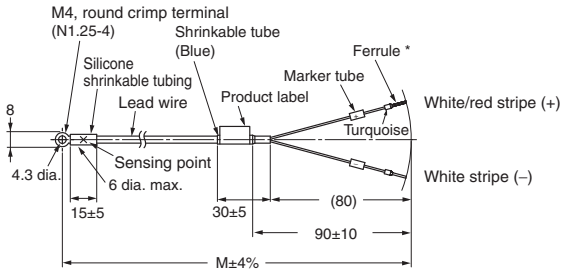

Lead wire length (m)	Element type: K (CA)
	Model
1	E52-CA1GTF 1M
2	E52-CA1GTF 2M

* Ferrule Dimensions
Cross-sectional diameter: 1.5 mm max.
Length: 9 mm max.

■Platinum Resistance Thermometers

Platinum Resistance Thermometers for Surface Temperature Measurement

Specifications

Element type	Pt100
Class	Class B
Protective tubing material	SUS304 With brass-nickel-plated bracket
Conductor type	3-conductor system
Temperature range	–50°C to 250°C
Lead wire	Silicone-covered 3-conductor cable and approx. 3.9 dia. 30/0.08 –50°C to 150°C

E52-P2GSF

Dimensions

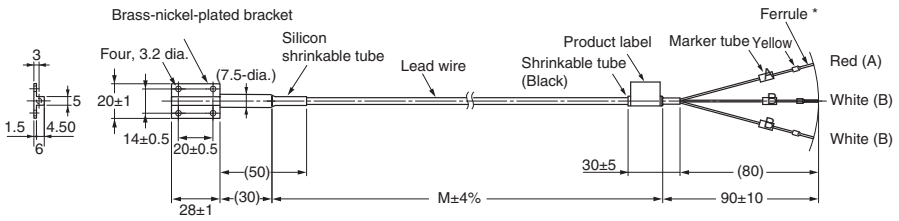

Lead wire length (m)	Model
1	E52-P2GSF 1M
2	E52-P2GSF 2M

* Ferrule Dimensions
Cross-sectional diameter: 1.5 mm max.
Length: 9 mm max.

Platinum Resistance Thermometers for Room Temperature Measurement

Specifications

Element type	Pt100
Class	Class B
Protective tubing material	SUS304
Conductor type	3-conductor system
Temperature range	–50°C to 60°C
Lead wire	Vinyl-covered 3-conductor cable with 6.1 dia. 20/0.18 –20°C to 60°C

E52-P10GRF

Dimensions

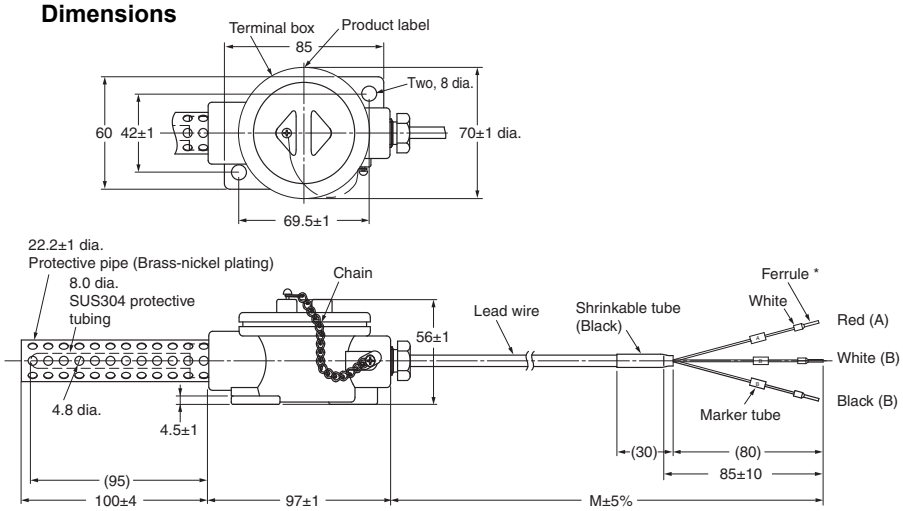

* Ferrule Dimensions
Cross-sectional diameter: 2 mm max.
Length: 9 mm max.

Lead wire length (m)	Model
2	E52-P10GRF 2M

Waterproof Platinum Resistance Thermometers

Specifications

Element wire	Pt100
Class	Class B
Protective tubing material	SUS304
Conductor type	3-conductor system
Temperature range	0°C to 70°C (underwater) –20°C to 70°C (in the air)
Lead wire	Vinyl-covered 3-conductor cable with 6.1 dia. 12/0.18 –25°C to 60°C
Resistive pressure	10 kg/cm^2 max.

E52-P10GPF

Dimensions

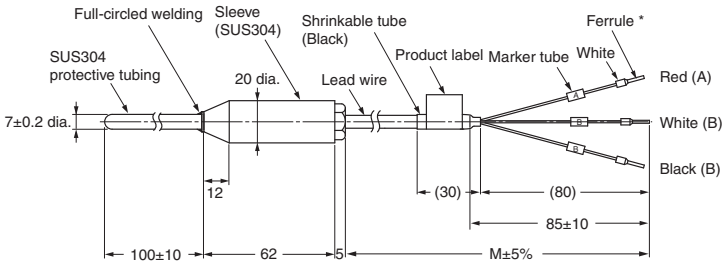

Note: The lead wires are vinyl-covered, and cannot be used underwater.
Use the E52-P5AF-40 if waterproof lead wires are required for use underwater.
Refer to page 49 for details.

* Ferrule Dimensions
Cross-sectional diameter: 2 mm max.
Length: 9 mm max.

Lead wire length (m)	Model
2	E52-P10GPF 2M
4	E52-P10GPF 4M

Corrosion-resistant Models with Fluororesin-covered Protective Tubing (with Ferrule)

FEP-molded Models (Completely Waterproof)

Specifications

Element type	Pt100
Class	Class B
Protective tubing material	Fluororesin (FEP) tube (element / fluororesin mold (FEP))
Conductor type	3-conductor system
Temperature range	–50°C to 180°C
Lead wire	Fluororesin (FEP) cover (with outer cover): –50°C to 180°C

E52-P5AF-40

Dimensions

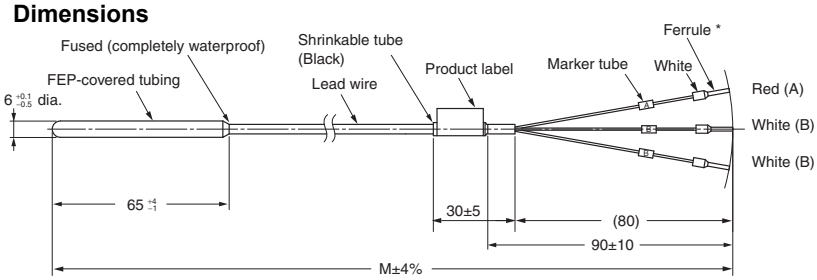

Model	Lead wire length (m)
E52-P5AF-40 2M	2
E52-P5AF-40 4M	4

* Ferrule Dimensions
Cross-sectional diameter: 2 mm max.
Length: 9 mm max.

Silicone-covered Lead Wires Models (with Ferrule)

■Thermocouples

Exposed-lead Models with Screws

Specifications

Element type	K (CA)
Class	Class 2 (0.75)
Screw material	SUS304
Thermal contact	Grounded type
Temperature range	0°C to 300°C
Lead wire	Silicone-covered (0.1/30): 0°C to 150°C
Terminal shape	Ferrule

Note: Refer to the installation example for the E52-CA1DY on page 46.

E52-CA1DF-40

Dimensions

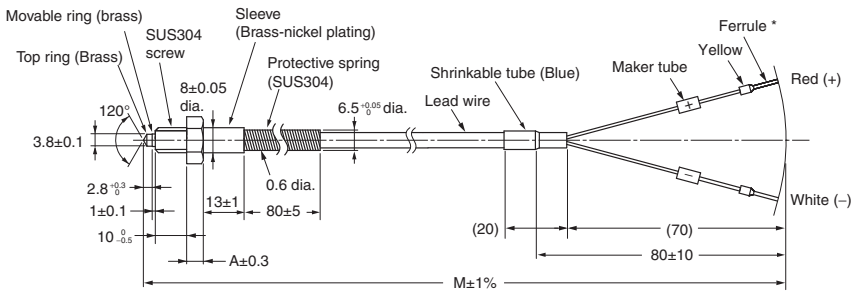

* Ferrule Dimensions
Cross-sectional diameter: 1.5 mm max.
Length: 9 mm max.

Model	Screw pitch	Lead wire length (m)
E52-CA1DF-40 M6 1M	M6 (P=1.0)	1
E52-CA1DF-40 M6 2M	M6 (P=1.0)	2
E52-CA1DF-40 M6 4M	M6 (P=1.0)	4

Thermocouples with Crimp Terminal

Specifications

Element type	K (CA)
Class	Class 2 (0.75)
Thermal contact	Grounded type
Temperature range	0°C to 200°C
Lead wire	Silicone-covered : 0°C to 150°C
Terminal shape	Ferrule

E52-CA1GTF-14

Dimensions

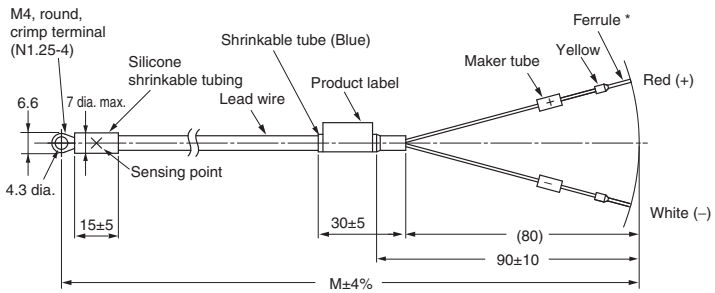

* Ferrule Dimensions
Cross-sectional diameter: 1.5 mm max.
Length: 9 mm max.

Model	Lead wire length (m)
E52-CA1GTF-14 1M	1
E52-CA1GTF-14 2M	2

Lead wire length (M): 1 or 2 m

Special models for Packaging Machines (with Ferrule)

■Model Number Legend

The type of protective tubing length, and lead length can be specified as shown below.

E52-CA□AF D=1 S□ □M

Code	Element type
CA	K

Protective tubing length L (cm)
Specify the length in centimeters within the following range: Unit (cm)

Diameter (D)	Length (L)
1.0	6
1.0	12

Code	Terminal type
A	Exposed lead wires

Code	Terminal processing
F	Ferrules

Code	Protective tubing diameter (D)	Protective tubing structure
D=1	1 mm	Sheathed

Code	Application
S	Temperature sensors for packaging machines

Code	Compensating conductor
1	Heat resistant (7 cores)
2	Flexible and heat resistant (30 cores)

Lead wire length M (m)
Specify the M length in meters.
Range: 0.5, 1, 2 m

Example:

Element: K, protective tubing length: 12 cm, exposed leads, Ferrules, protective tubing diameter: 1 mm, flexible and heat resistive, lead length: 2 m
E52-CA12AF D=1 S2 2M

Sheathed Thermocouples

Specifications

Element type	K (CA)
Class	Class 2 (0.75)
Thermal contact	Grounded type
Temperature range	0°C to 650°C

Note: Usage together with the automatic filter adjustment function of E5□D Digital Temperature Controllers is recommended.

Exposed-lead Models

E52-CA□AF

Dimensions

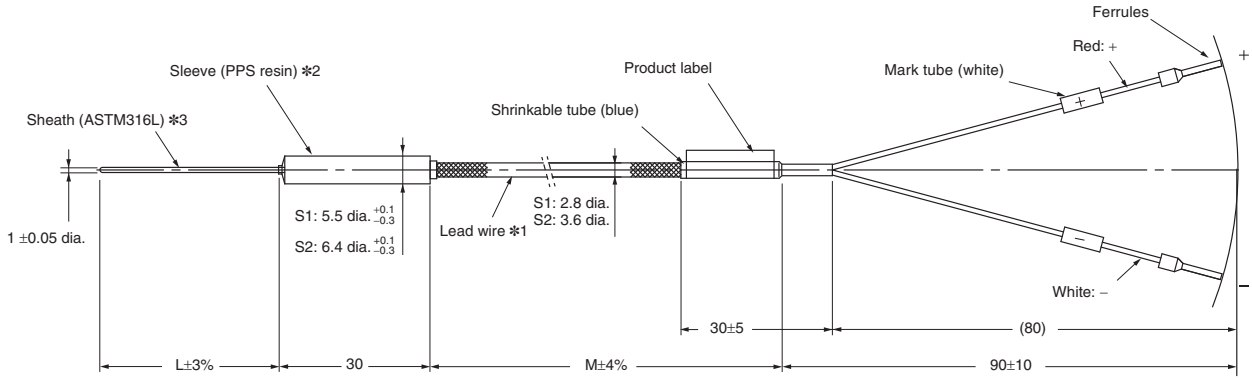

*1. Lead wires (compensating conductor) (excluding Y-type crimp terminals)
Heat-resistance model (0 to 200°C): PFA glass-wool sheath with stainless outer shield
Flexible, heat-resistance model (0 to 200°C): PFA glass-wool sheath with stainless outer shield
*2. Temperature range of sleeve: 0 to 260°C
*3. The sheath can be easily bent. Performance will not be adversely affected even if the sheath is bent somewhat.
Do not bend the sheath beyond the following value.
Minimum bending radius: 2 mm
Bendable section: 8 mm or farther from the end

List of Models

Terminal type	Protective tubing diameter D (mm)	Protective tubing length L (cm)	Lead wire type	Lead wire length M (m)		
				0.5	1	2
				Model		
Exposed-lead Models	1 dia.	6	Heat resistive	E52-CA6AF D=1 S1 0.5M	E52-CA6AF D=1 S1 1M	---
			Flexible Heat resistive	---	E52-CA6AF D=1 S2 1M	E52-CA6AF D=1 S2 2M
		12	Heat resistive	E52-CA12AF D=1 S1 0.5M	E52-CA12AF D=1 S1 1M	---
			Flexible Heat resistive	---	E52-CA12AF D=1 S2 1M	E52-CA12AF D=1 S2 2M

For Installation Method, refer to page 37.

Accessories

Compression Fittings

Model Information

PT Series, PT-N Series, PT-30-N Series, M-N Series

Model	Screw of part	Applicable protective tubing diameter	Dimension						
			U	L1	L2	Opposite side A	Opposite side B	U1	U2
PT1/8-N 1.0	R1/8	1.0 dia.	9	12	5	13	13	11	8
PT1/8-N 1.6		1.6 dia.						9.5	
PT1/8-N 3.2		3.2 dia.						9	
PT1/8-N 4.0		4.0 dia.						8	
PT1/8-N 4.8		4.8 dia.						7	
PT1/8-30-N 3.2		3.2 dia.						9	
PT1/8-30-N 4.8		4.8 dia.						7	
PT1/4-N 3.2	R1/4	3.2 dia.	12	14	7	17	17	13	11
PT1/4-N 4.0		4.0 dia.						12.5	
PT1/4-N 4.8		4.8 dia.						12	
PT1/4-N 6.4		6.4 dia.						10	
PT1/4-30-N 3.2		3.2 dia.						13	
PT1/4-30-N 4.8		4.8 dia.						12	
PT1/4-30-N 6.4		6.4 dia.						10	
PT3/8-N 8.0	R3/8	8 dia.	14	15	7	19	17	9	11
PT3/8-30-N 8.0		8 dia.							
M12-N 4.8	M12	4.8 dia.	12	14	7	17	17	12	11
PT 1/2 D=10	R1/2	10 dia.	19	8	15.1	22	19	Refer to the dimension below <R1/2>.	

Note: The compression fittings PT-N series, PT-30-N series, and MN series used to have TS at the beginning of the model specifications, but this has been removed since May 2025. There is no changes to product specifications as a result of the deletion.

PT-N (BEAD) Series

Model	Screw of part	Dimension	
		U1	U2
PT1/8-N 1.6 (BEAD) C3602	R1/8	9.5	8
PT1/8-N 4.8 (BEAD) C3602		7	8
PT1/8-N 4.8 (BEAD) SUS316		7	8
PT1/4-N 3.2 (BEAD) C3602	R1/4	13	11
PT1/4-N 3.2 (BEAD) SUS316		13	11
PT1/4-N 6.4 (BEAD) C3602		10	11
PT1/4-N 6.4 (BEAD) SUS316		10	11
PT3/8-N 8.0 (BEAD) C3602	R3/8	9	11
PT3/8-N 8.0 (BEAD) SUS316		9	11

Note: The Compression Fitting is not of airtight construction. Do not use the Compression Fitting for applications in which the exposure of the sensing object will cause problems.

The compression fitting is a screw that adjusts and secures the insertion length of Temperature Sensors with the above protective tubing diameters.

Material: PT-N Series
Main body: SUS304 Fixing beads: C3602
PT-30-N Series
Main body: SUS316 Fixing beads: SUS316
M-N Series
Main body: SUS304 Fixing beads: C3602
PT-N (BEAD) Series
Fixing beads: C3602, SUS316

<R1/8, 1/4, R3/8>

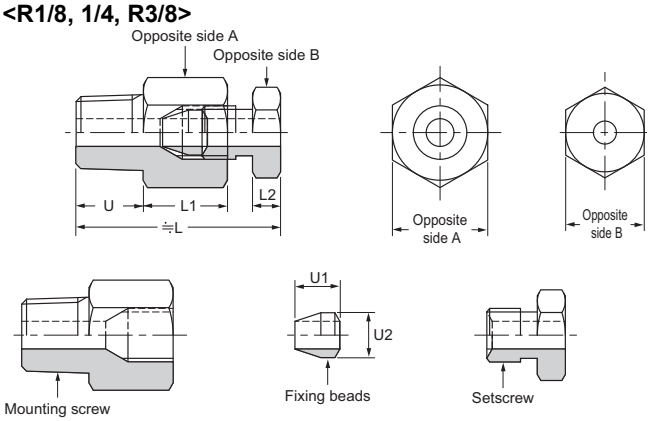

<R1/2>

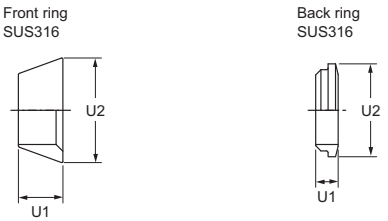

	U1	U2
Front ring	7.3	17.4
Back ring	3.8	15.7

<R1/8, 1/4, R3/8>

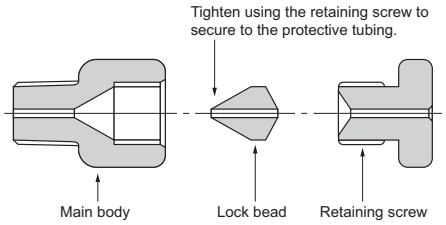

<R1/2>

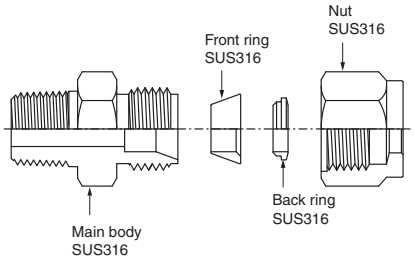

Source: JIS B 0203 (Unit: mm)

Nominal thread size	T.P.I. (No. of threads /inch)	Outer diameter: d	Effective diameter: d2	Root diameter: d1	Standard diameter position a (from pipe end)	Minimum effective screw length: f
R 1/8	28	9.728	9.147	8.566	3.97 ±0.91	2.5
R 1/4	19	13.157	12.301	11.445	6.01 ±1.34	3.7
R 3/8	19	16.662	15.806	14.950	6.35 ±1.34	3.7
R 1/2	14	20.955	19.793	18.631	8.16 ±1.81	5.0

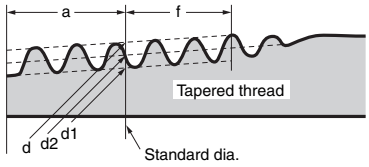

Loose Flanges

Model Information

Applicable protective tubing diameter	Model
3.2 dia.	MF-1 D=3.2
4.8 dia.	MF-1 D=4.8
6.4 dia.	MF-1 D=6.4
8 dia.	MF-1 D=8
10 dia.	MF-2 D=10
12 dia.	MF-2 D=12
15 dia.	MF-2 D=15
22 dia.	MF-2 D=22

Note: 1. Use the Loose Flange in atmospheric pressure. The Loose Flange is not of airtight construction.
2. Use the Loose Flange at 400°C maximum.
3. Do not apply the Loose Flange to protective tubing diameters other than the applicable ones.

Material: Aluminum

MF-1

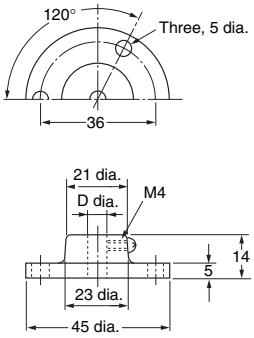

MF-2

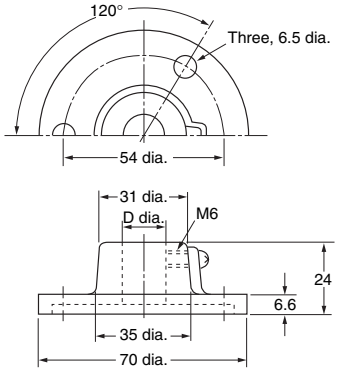

Compensating Conductors

The material of the Compensating Conductor is the same as or similar to that of the Thermocouple. Therefore, the Thermocouple can be connected to the Compensating Conductor just as if the length of the Thermocouple is to be extended. A standard model for a temperature range between –20°C and 70°C and two types of heat-resistive models for a temperature range between 0°C and 150°C are available.

Be sure to use the compensating conductor for the extension of the length of the thermocouple.

Model Information

Thermocouple	Heat resistance	Exterior (Length)	Model		
			1 m	2 m	4 m
R	Standard	Fully vinyl-covered (waterproof)	WPRG-N 1M	WPRG-N 2M	WPRG-N 4M
	Heat resistive	Fully glass-wool-covered	WPRH-N 1M	WPRH-N 2M	WPRH-N 4M
		Fully glass-wool-covered with external shield of stainless steel	WPRH6-N 1M	WPRH6-N 2M	WPRH6-N 4M
K (CA)	Standard	Fully vinyl-covered (waterproof)	WCAG-N 1M	WCAG-N 2M	WCAG-N 4M
	Heat resistive	Fully glass-wool-covered	WCAH-N 1M	WCAH-N 2M	WCAH-N 4M
		Fully glass-wool-covered with external shield of stainless steel	WCAH6-N 1M	WCAH6-N 2M	WCAH6-N 4M
		Silicone-covered (See note 2.)	WCAG-40 1M	WCAG-40 2M	WCAG-40 4M
J (IC)	Standard	Vinyl covered (waterproof)	WICG-N 1M	WICG-N 2M	WICG-N 4M
	Heat resistive	Fully glass-wool-covered	WICH-N 1M	WICH-N 2M	WICH-N 4M
		Fully glass-wool-covered with external shield of stainless steel	WICH6-N 1M	WICH6-N 2M	WICH6-N 4M

Thermocouple	Heat resistance	Exterior (Length)	Model		
			8 m	10 m	15 m
R	Standard	Fully vinyl-covered (waterproof)	WPRG-N 8M	WPRG-N 10M	WPRG-N 15M
	Heat resistive	Fully glass-wool-covered	WPRH-N 8M	WPRH-N 10M	WPRH-N 15M
		Fully glass-wool-covered with external shield of stainless steel	WPRH6-N 8M	WPRH6-N 10M	WPRH6-N 15M
K (CA)	Standard	Fully vinyl-covered (waterproof)	WCAG-N 8M	WCAG-N 10M	WCAG-N 15M
	Heat resistive	Fully glass-wool-covered	WCAH-N 8M	WCAH-N 10M	WCAH-N 15M
		Fully glass-wool-covered with external shield of stainless steel	WCAH6-N 8M	WCAH6-N 10M	WCAH6-N 15M
		Silicone-covered (See note 2.)	WCAG-40 8M	WCAG-40 10M	WCAG-40 15M
J (IC)	Standard	Vinyl covered (waterproof)	WICG-N 8M	WICG-N 10M	WICG-N 15M
	Heat resistive	Fully glass-wool-covered	WICH-N 8M	WICH-N 10M	WICH-N 15M
		Fully glass-wool-covered with external shield of stainless steel	WICH6-N 8M	WICH6-N 10M	WICH6-N 15M

Thermocouple	Heat resistance	Exterior (Length)	Model		
			20 m	30 m	50 m
R	Standard	Fully vinyl-covered (waterproof)	WPRG-N 20M	WPRG-N 30M	WPRG-N 50M
	Heat resistive	Fully glass-wool-covered	WPRH-N 20M	WPRH-N 30M	WPRH-N 50M
		Fully glass-wool-covered with external shield of stainless steel	WPRH6-N 20M	WPRH6-N 30M	WPRH6-N 50M
K (CA)	Standard	Fully vinyl-covered (waterproof)	WCAG-N 20M	WCAG-N 30M	WCAG-N 50M
	Heat resistive	Fully glass-wool-covered	WCAH-N 20M	WCAH-N 30M	WCAH-N 50M
		Fully glass-wool-covered with external shield of stainless steel	WCAH6-N 20M	WCAH6-N 30M	WCAH6-N 50M
		Silicone-covered (See note 2.)	WCAG-40 20M	WCAG-40 30M	WCAG-40 50M
J (IC)	Standard	Vinyl covered (waterproof)	WICG-N 20M	WICG-N 30M	WICG-N 50M
	Heat resistive	Fully glass-wool-covered	WICH-N 20M	WICH-N 30M	WICH-N 50M
		Fully glass-wool-covered with external shield of stainless steel	WICH6-N 20M	WICH6-N 30M	WICH6-N 50M

Note: 1. Compensating Conductors with lengths, increased in units of a meter, up to 100 meters are available on request. Specify lengths above 100 meters in units of 100 meters. The maximum length depends on the product. Contact your OMRON representative for details.

2. It has the same waterproof characteristics as the standard model (fully vinyl-covered) and can be used at high temperatures.

Specifications (JIS C1610-1995)

Model	Type of thermo-couple	Use	Code (See note.)	Exterior	Number of wires/wire diameter	Operating temperature range (°C)	Error (°C)	Exterior color
WPRG-N	R	Standard	RCA-2-G	Fully vinyl-covered (waterproof)	7/0.3	0 to 90	±30	Black
WPRH-N		Heat resistive	RCB-2-H	Fully glass-wool-covered	7/0.32	0 to 150	±60	
WPRH6-N				Fully glass-wool-covered with external shield of stainless steel				
WCAG-N	K (CA)	Standard	KCC-2-G	Fully vinyl-covered (waterproof)	7/0.3	0 to 90	±100	Blue
WCAH-N		Heat resistive	KCB-2-H	Fully glass-wool-covered	7/0.32	0 to 150		
WCAH6-N				Fully glass-wool-covered with external shield of stainless steel				
WCAG-40		Heat resistive for moving parts	KX-2-G	Silicone-covered	30/0.1	–20 to 150	±100	
WICG-N	J (IC)	Standard	JX-2-G	Fully vinyl-covered (waterproof)	7/0.3	–20 to 90	±140	Yellow
WICH-N		Heat resistive	JX-2-H	Fully glass-wool-covered	7/0.32	0 to 150		
WICH6-N				Fully glass-wool-covered with external shield of stainless steel				

Note: Symbols conform to JIS standards.
For code having duplicate exterior, check the application and check in our models.

Safety Precautions

Precautions for Correct Use

Precautions

- Make sure that the protective tubing material is suitable for the sensing object. Otherwise, the Temperature Sensor's protective tubing may be corroded by the sensing object, preventing temperature measurement.
- Do not subject the Temperature Sensor's protective tubing to excessive vibration, shock, or weight. Platinum resistance thermometers in particular use extremely fine resistance elements. Using these Temperature Sensors in locations subject to mechanical shock or vibration may result in broken wires.

Lead Wire Extension

- Platinum Resistance Thermometers
  Use lead wires for extension with the same resistance and same length for each of the three wires. The resistance of the lead wire will affect the indicated temperature when extended. Therefore, use wires with thick cores. (OMRON does not supply lead wires for extension.)
- Thermocouples
  Always use compensating conductors for thermocouples when extending the lead wires.
  Use a compensating conductor designed for the connected thermocouple. If you use a different type of compensating conductor from the thermocouple or if you use normal copper wires to extend, correct temperature measurement will not be possible. Also, do not connect positive and negative incorrectly.
- Thermistors
  Use cables with thick core wires for the lead wires used for extension. The lead wires do not have polarity.
- Regardless of the type of Temperature Sensor used, resistance to noise will be reduced if the leads are extended. Never extend the lead any further than necessary.

Correct Use

- Select a location for installing the Temperature Sensor in which the temperature distribution of the sensing object will not change.
- Make sure that the length of the Temperature Sensor's protective tubing is sufficient to touch or insert into the sensing object. The length of metallic protective tubing must be at least 20 times its diameter, and the length of non-metallic protective tubing must be at least 15 times its diameter.
  The insertion length of the special model for packaging machines (E52-CA□AY S□) is 8 mm or longer.
- Do not repeatedly bend the Temperature Sensor at the same point. The minimum allowable bending radius of sheathed Temperature Sensors is approximately five times the protective tubing diameter. Bending part of the sensor at an acute angle and then extending again may result in broken internal wires or cracks in the element. Do not bend the soldered sections.
  The minimum allowable bending radius of the special model for packaging machines (E52-CA□AY S□) is twice the protective tubing diameter.
- Do not bend the protective tubing while measuring low temperatures, which will cause the protective tubing to become fragile.
- Do not bend sheathed Temperature Sensors to within 100 mm of the end to protect the sensing section.
  Bending work can be performed on any part that is 8 mm or more from the tip of the special model for packaging machines (E52-CA□AY S□).
- Do not allow the temperature of the section connecting the protective tubing and lead wire to exceed 70°C for exposed-lead models or 100°C for heat-resistive models.
  The special model for packaging machines (E52-CA□AY S□) can be used at temperatures of up to 260°C.
- Do not allow the temperature of the terminal box to exceed 100°C for exposed-terminal models or 90°C for enclosed-terminal models.
- Do not subject the ceramic protective tubing of high-temperature thermocouples to sudden heating or cooling. Ceramic protective tubing has a low resistance to thermal shock. Either preheat the protective tubing or gradually heat to the required temperature.
- Do not use standard lead wires in locations subject to strong bending stress or on moving parts.
- Thermocouples with crimp terminal
  Use the crimp terimal only as a secondary means of securing the thermocouple. The thermocouple junction of the thermocouple is at the crimped section of the crimp terminals, so a temperature difference occurs between the screw fixating section and the thermocouple junction. Confirm the difference in temperature between the location that is to be measured and the temperature measured by the thermocouple in advance at the actual application temperature.

Mounting

1. Install explosion-proof models according to the applicable laws and regulations regarding explosion proofing.
2. Sheathed Temperature Sensors with long protective tubing are coiled for shipping. Straighten the tubing by unwinding it in the opposite direction, without twisting it.
3. Do not excessively bend the section connecting the protective tubing to the lead wires of exposed-lead wires models. Do not insert this section into the sensing object.
4. Do not pull the lead wires with force. Doing so may cause broken wires at the connected section.
5. When measuring at high temperatures that cause the protective tubing to warp, either insert the Temperature Sensor vertically or use an appropriate means to hold the Temperature Sensor in place.
6. To obtain more accurate values, maintain the temperature of the exposed protective tubing to prevent heat loss through heat dissipation.
7. If inductive noise is generated in the Temperature Sensor due to power lines or other source, either change the installation position of the Temperature Sensor and lead wires or provide a shield for the lead wires.
8. Use airtight Temperature Sensors for applications using sensing objects below room temperature, to prevent condensation within the protective tubing and faulty insulation.
9. Do not use the Temperature Sensor in locations that may expose the terminals to water or other liquid.
10. Temperature Sensors are precision devices. Do not subject the Temperature Sensors to shock. Take particular care with products that have ceramic components (ceramic protective tubing, platinum resistance thermometers).
11. Do not use ultrasonic cleaning or otherwise subject platinum resistance thermometers to extreme vibration. Doing so may cause wires to break within a short time. For such environments, consider using sheathed thermocouples, which have a superior vibration-resistant construction compared with platinum resistance thermometers and may be more suitable for the required application, depending on the level of vibration.
12. The life of the protective tubing will be significantly shortened when measuring the temperature of dissolved metals. Select protective tubing material to suit the type of dissolved metal to be measured.
13. Use the following installation methods for applications measuring the temperature of fluids.
    (a) Install the Temperature Sensor vertically to the flow in tubes with relatively large diameters that enable deep insertion.
    (b) Install the Temperature Sensor on a diagonal against the flow in tubes with slim diameters that do not enable deep insertion.
    (c) Install the Temperature Sensor into the convex section of a bend if the tubing diameter is even thinner than in (b).

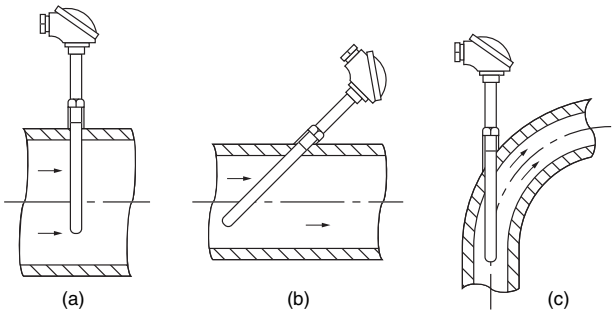

Use an installation design that provides sufficient strength margin.

ALL DIMENSIONS SHOWN ARE IN MILLIMETERS.
To convert millimeters into inches, multiply by 0.03937. To convert grams into ounces, multiply by 0.03527.

In the interest of product improvement, specifications are subject to change without notice.

Terms and Conditions Agreement

Read and understand this catalog.
Please read and understand this catalog before purchasing the products. Please consult your OMRON representative if you have any questions or comments.

Warranties.
(a) Exclusive Warranty. Omron's exclusive warranty is that the Products will be free from defects in materials and workmanship for a period of twelve months from the date of sale by Omron (or such other period expressed in writing by Omron). Omron disclaims all other warranties, express or implied.
(b) Limitations. OMRON MAKES NO WARRANTY OR REPRESENTATION, EXPRESS OR IMPLIED, ABOUT NON-INFRINGEMENT, MERCHANTABILITY OR FITNESS FOR A PARTICULAR PURPOSE OF THE PRODUCTS. BUYER ACKNOWLEDGES THAT IT ALONE HAS DETERMINED THAT THE
PRODUCTS WILL SUITABLY MEET THE REQUIREMENTS OF THEIR INTENDED USE.
Omron further disclaims all warranties and responsibility of any type for claims or expenses based on infringement by the Products or otherwise of any intellectual property right. (c) Buyer Remedy. Omron's sole obligation hereunder shall be, at Omron's election, to (i) replace (in the form originally shipped with Buyer responsible for labor charges for removal or replacement thereof) the non-complying Product, (ii) repair the non-complying Product, or (iii) repay or credit Buyer an amount equal to the purchase price of the non-complying Product; provided that in no event shall Omron be responsible for warranty, repair, indemnity or any other claims or expenses regarding the Products unless Omron's analysis confirms that the Products were properly handled, stored, installed and maintained and not subject to contamination, abuse, misuse or inappropriate modification. Return of any Products by Buyer must be approved in writing by Omron before shipment. Omron Companies shall not be liable for the suitability or unsuitability or the results from the use of Products in combination with any electrical or electronic components, circuits, system assemblies or any other materials or substances or environments. Any advice, recommendations or information given orally or in writing, are not to be construed as an amendment or addition to the above warranty.
See http://www.omron.com/global/ or contact your Omron representative for published information.

Limitation on Liability; Etc.
OMRON COMPANIES SHALL NOT BE LIABLE FOR SPECIAL, INDIRECT, INCIDENTAL, OR CONSEQUENTIAL DAMAGES, LOSS OF PROFITS OR PRODUCTION OR COMMERCIAL LOSS IN ANY WAY CONNECTED WITH THE PRODUCTS, WHETHER SUCH CLAIM IS BASED IN CONTRACT, WARRANTY, NEGLIGENCE OR STRICT LIABILITY.
Further, in no event shall liability of Omron Companies exceed the individual price of the Product on which liability is asserted.

Suitability of Use.
Omron Companies shall not be responsible for conformity with any standards, codes or regulations which apply to the combination of the Product in the Buyer's application or use of the Product. At Buyer's request, Omron will provide applicable third party certification documents identifying ratings and limitations of use which apply to the Product. This information by itself is not sufficient for a complete determination of the suitability of the Product in combination with the end product, machine, system, or other application or use. Buyer shall be solely responsible for determining appropriateness of the particular Product with respect to Buyer's application, product or system. Buyer shall take application responsibility in all cases.
NEVER USE THE PRODUCT FOR AN APPLICATION INVOLVING SERIOUS RISK TO LIFE OR PROPERTY OR IN LARGE QUANTITIES WITHOUT ENSURING THAT THE SYSTEM AS A WHOLE HAS BEEN DESIGNED TO ADDRESS THE RISKS, AND THAT THE OMRON PRODUCT(S) IS PROPERLY RATED AND INSTALLED FOR THE INTENDED USE WITHIN THE OVERALL EQUIPMENT OR SYSTEM.

Programmable Products.
Omron Companies shall not be responsible for the user's programming of a programmable Product, or any consequence thereof.

Performance Data.
Data presented in Omron Company websites, catalogs and other materials is provided as a guide for the user in determining suitability and does not constitute a warranty. It may represent the result of Omron's test conditions, and the user must correlate it to actual application requirements. Actual performance is subject to the Omron's Warranty and Limitations of Liability.

Change in Specifications.
Product specifications and accessories may be changed at any time based on improvements and other reasons. It is our practice to change part numbers when published ratings or features are changed, or when significant construction changes are made. However, some specifications of the Product may be changed without any notice. When in doubt, special part numbers may be assigned to fix or establish key specifications for your application. Please consult with your Omron's representative at any time to confirm actual specifications of purchased Product.

Errors and Omissions.
Information presented by Omron Companies has been checked and is believed to be accurate; however, no responsibility is assumed for clerical, typographical or proofreading errors or omissions.

2025.4

In the interest of product improvement, specifications are subject to change without notice.

OMRON Corporation
Industrial Automation Company

http://www.ia.omron.com/

(c)Copyright OMRON Corporation 2025 All Right Reserved.