Non-Contact Safety Door Switch
D40A-2

Supports a wide range of equipment requirements with safety and environmental resistance

- Wide range of equipment requirements in each region
- PLe/Safety Category 4 and cost optimization
- High flexibility due to unique design that does not use radio waves
- Highly protective structure against water jet spray
- No safety label means it's safe for equipment requiring foreign object contamination and hygiene measures

For the most recent information on models that have been certified for safety standards, refer to your OMRON website.

⚠ Be sure to read the *Safety Precautions* on page 21.

Model Number Structure

Model Number Legend
Non-Contact Safety Door Switch

Switch

D40A - □ 2 □ □
Series (1) (2) (3) (4)

(1) Set/Individual

None : Set of switch and actuator
S : Switch only

(2) Type

2 : Advanced model

(3) Auxiliary Output

C : PNP transistors output
D : Photocoupler output

(4) Connection method/cable length

2 : Exposed lead wires, 2 m
5 : Exposed lead wires, 5 m
015-F : M12 connector model, 0.15 m

Note: For details on D40A-□1 series, basic models, refer to the *D40A/G9SX-NS Catalog* (Cat. No. C140).

Actuator

D40A - A 2
Series (1) (2)

(1) Product

A: Actuator

(2) Type

2: Advanced model

Ordering Information

Switch and Actuator (set)

Appearance	Connection method	Auxiliary Output	Cable length	Model
	Cable with exposed lead wires	PNP transistors output	2 m	**D40A-2C2**
			5 m	**D40A-2C5**
		Photocoupler output	2 m	**D40A-2D2**
			5 m	**D40A-2D5**
	Cable with M12 connector (connector model)	PNP transistors output	0.15 m (with 5-pin connector)	**D40A-2C015-F**

Switch/Actuator (sold separately)

Switches

Appearance	Connection method	Auxiliary Output	Cable length	Model
	Cable with exposed lead wires	PNP transistors output	2 m	**D40A-S2C2**
			5 m	**D40A-S2C5**
		Photocoupler output	2 m	**D40A-S2D2**
			5 m	**D40A-S2D5**
	Cable with M12 connector (connector model)	PNP transistors output	0.15 m (with 5-pin connector)	**D40A-S2C015-F**

Actuator

Appearance	Model
	D40A-A2

Accessory (Sold separately)

Cable with connector

Appearance	Connection method	Cable length	Model
	Connecting cable with M12 connector (one-end)	2 m	**XS2F-D521-DG0-A**
		5 m	**XS2F-D521-GG0-A**
		10 m	**XS2F-D521-JG0-A**
		15 m	**XS2F-D521-KG0-A**
		20 m	**XS2F-D521-LG0-A**
	Connecting cable with M12 connectors (both ends)	2 m	**XS2W-D521-DG1-A**
		5 m	**XS2W-D521-GG1-A**
		10 m	**XS2W-D521-JG1-A**
		15 m	**XS2W-D521-KG1-A**
		20 m	**XS2W-D521-LG1-A**

Note: For details, refer to *XS2 Data Sheet*.

Related Product Safety Controllers

Non-Contact Door Switch Controllers G9SX-NS

Appearance	Safety outputs ✱1		Auxiliary outputs ✱3	Logical AND connection input	Logical AND connection output	Max. OFF delay time ✱4	Rated voltage	Terminal block type	Model
	Instantaneous	OFF-delayed ✱2							
	2 (Semi-conductors)	0	2 (Semi-conductors)	1	1	---	24 VDC	Screw terminals	**G9SX-NS202-RT**
								Spring-cage terminals	**G9SX-NS202-RC**
		2 (Semi-conductors)				3.0 s		Screw terminals	**G9SX-NSA222-T03-RT**
								Spring-cage terminals	**G9SX-NSA222-T03-RC**

Note: For details, refer to the *G9SX Series Catalog* (Cat.No. F120).
✱1. P channel MOS FET transistor output
✱2. The OFF-delayed output becomes an instantaneous output by setting the OFF-delay time to 0 s.
✱3. PNP transistor output
✱4. The OFF-delay time can be set in 16 steps as follows:
0/0.2/0.3/0.4/0.5/0.6/0.7/0.8/0.9/1.0/1.2/1.4/1.8/2.0/2.5/3.0 s

Safety Controller G9SP Series

Appearance	No. of I/O points				Unit version	Model
	Safety inputs	Test outputs	Safety outputs	Standard outputs		
	10	4	Semiconductor outputs: 4	4	Ver. 2.0	**G9SP-N10S**
	10	6	Semiconductor outputs: 16	--		**G9SP-N10D**
	20	6	Semiconductor outputs: 8	--		**G9SP-N20S**

Note: For details, refer to the *G9SP Series Catalog* (Cat. No. F090).

NX Series Safety Controller

Safety CPU Units NX-SL

Unit type	Appearance	Specifications				Unit version	Model
		Maximum number of safety I/O points	Program capacity	Number of safety I/O connections	I/O refreshing method		
Safety CPU Unit (NX-SL5□□□)		1024 points	2048 KB	128	Free-Run refreshing	Ver. 1.4	NX-SL5500
		2032 points	4096 KB	254			NX-SL5700
Safety CPU Unit (NX-SL3□□□)		256 points	512 KB	32		Ver. 1.1	NX-SL3300
		1024 points	2048 KB	128			NX-SL3500

Note: For details, refer to the *NX-series NX-SL5 datasheet* (Cat.No. F120) or *NX-SL3 datasheet* (Cat.No. F109)

NX Series Safety I/O Units

Safety Input Unit NX-SI

Unit type	Appearance	Specifications							Unit version	Model
		Number of safety input points	Number of test output points	Internal I/O common	Rated input voltage	OMRON special safety input devices *1	Number of safety slave connections	I/O refreshing method		
Safety Input Units		4 points	2 points	Sinking inputs (PNP)	24 VDC	Can be connected.	1	Free-Run refreshing	Ver. 1.1	NX-SIH400

*1. The following OMRON special safety input devices can be connected directly without a special controller.
For detail of connectable OMRON special safety input devices, refer to the *NX-series User's Manual Safety Control Unit/Communication Control Unit* (Cat. No. Z395).

Type	Model and corresponding PL and safety category
OMRON Single-beam Safety Sensors	E3ZS
OMRON Non-contact Safety Door Switches	D40A-2, D40A

Safety Output Units NX-SO

Unit type	Appearance	Specifications						Unit version	Model
		Number of safety output points	Internal I/O common	Maximum load current	Rated voltage	Number of safety slave connections	I/O refreshing method		
Safety Output Units		2 points	Sourcing outputs (PNP)	2.0 A/point, 4.0 A/Unit at 40°C, and 2.5 A/Unit at 55°C The maximum load current depends on the installation orientation and ambient temperature.	24 VDC	1	Free-Run refreshing	Ver. 1.0	NX-SOH200
		4 points	Sourcing outputs (PNP)	0.5 A/point and 2.0 A/Unit	24 VDC	1	Free-Run refreshing	Ver. 1.0	NX-SOD400

Note: For details, refer to the *NX-series NX-SI/SO datasheet* (Cat.No. F123).

Standards Certification

Declaration of Conformity

EU: Machinery Directive 2006/42/EC,
EMC Directive 2014/30/EU,
RoHS Directive 2011/65/EU
UK: 2008 No. 1597 Machinery (Safety),
2016 No. 1091 EMC,
2012 No. 3032 RoHS

Safety Standards

Approvals

- ISO/EN ISO 13849-1: Category 4 PLe ✻
- IEC/EN 61508 SIL3 ✻
- IEC/EN 60947-5-3 PDDB ✻
- EN 55011
- ISO/EN ISO 14119 (Low level coded)

✻ D40A-2□ complies with these standards when connected to the following OMRON Safety Controllers:
Non-Contact Door Switch Controller: G9SX-NS Series
Safety Controller: G9SP Series or NX Series Safety Control Unit

UL Certification

- UL 508
- CAN/CSA C22.2 No.14

Refer to "Reliability data for the safety of control components_SISTEMA library" on OMRON's website
English: https://www.ia.omron.com/support/sistemalibrary/index.html
Japanese: https://www.ia.omron.com/support/sistemalibrary/index_jp.html

Ratings and Specifications

Non-Contact Safety Door Switch D40A-2

Ratings

Item	D40A-2	
	D40A-□2C□	D40A-□2D□
Supply voltage	24 VDC +10%/-15% (class 2 or LVLC)	
Rated power consumption	0.6 W max. ✻1	
Auxiliary output	24 VDC, 50 mA (PNP transistors output)	24 VDC, 20 mA (Photocoupler output)

✻1. Power consumption of loads is not included.

Specifications and Performance

Item		D40A-2	
		D40A-□2C□	D40A-□2D□
Interlock type		Type 4 (EN ISO 14119)	
Coding level		Low level coded (EN ISO 14119)	
Assured operating and release distance	**Operating distance OFF→ON**	5 mm min. ✻1	
	Operating distance ON→OFF	15 mm max. ✻1	
	Differential travel	2.5 mm max.	
	Temperature influence	±20% of operating distance at 23°C, within temperature range of -25 to 70°C	
	Repeat accuracy (max.)	±10% of operating distance at 23°C	
Switching frequency		1 Hz	
Ambient operating temperature		-25 to 70°C (No freezing or condensation)	
Ambient operating humidity		25% to 85%	
Insulation resistance (Between all conductive parts and switch case)		50 MΩ min. (by 500 VDC megger)	
Dielectric strength (Between all conductive parts and switch case)		1000 VAC for 1 min	
Rated impulse withstand voltage		1 kV	
Vibration resistance		Frequency: 10 to 55 Hz Amplitude: 0.75 mm half amplitude	
Mechanical shock resistance		300 m/s^2 min.	
Pollution degree		3	
Electromagnetic compatibility		As per IEC/EN 60947-5-3	
Degree of protection	**IEC 60529**	IP66/IP67	
	UL 50E	Enclosure Type 5 ✻2	
Material		Molded PBT (case)/ PVC (cable)	
Terminal tightening torque for M4 screws		1 N·m	
Indicators (LED)		Actuator not detected (red); actuator detected (yellow)	
Cable outlet length		0.15 m (Connector type), 2 m, 5 m	2 m, 5 m
Number of connectable switches		• When connecting with G9SX-NS/NSA : 30 max. • When connecting with G9SP-N10S : 15 max. (15 switches x single channel) • When connecting with G9SP-N10D/20S : 30 max. (15 switches x two channels) • When connecting with NX-SIH400 : 20 max. (10 switches x two channels)	
Weight		Switch (D40A-□2C5): approx. 215 g Switch (D40A-□2D5): approx. 225 g Actuator (D40A-A2): approx. 25 g	

✻1. Operating distance means the distance of sensing surfaces between switch and actuator.
✻2. The D40A-S2C015-F and D40A-2C015-F connector types are not supported.

Engineering Data (Typical Data)

Detection Ranges

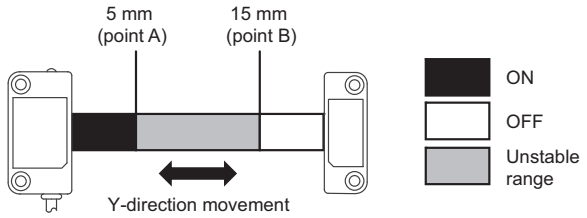

Operating distance

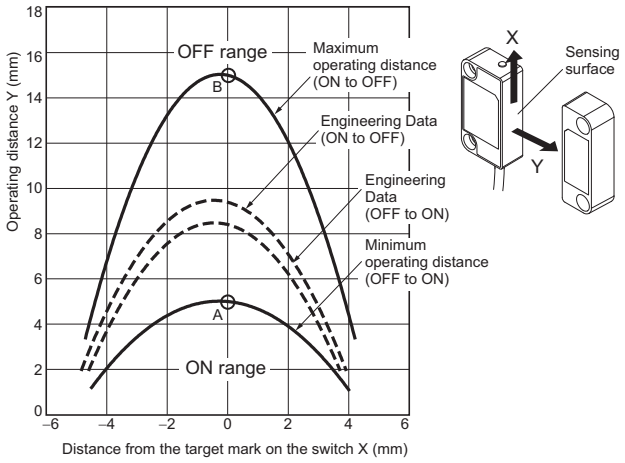

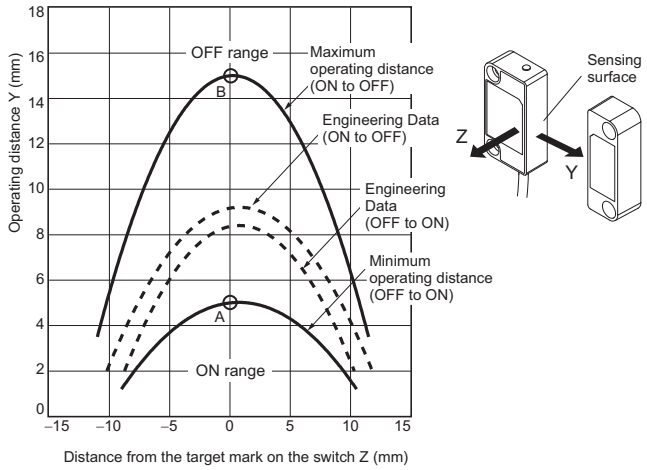

Note: 1. The operating distance is the distance between the switch and actuator sensing surfaces.
Note: 2. The graph indicates shifting to X or Z direction from following condition that the switch and actuator target marks are on the same axis and the sensing surfaces are exactly parallel condition.
Dashed lines indicate reference value for maximum and minimun oprating distance at abient temperature +23°C. The solid line indicates reference values of the maximum and minimum operating distances.
Note: 3. The operating distance may be affected by ambient metal, magnet catches, and temperature.

Actuator mounting direction

Mounting Directions

Install the switch and actuator so their target marks face each other.

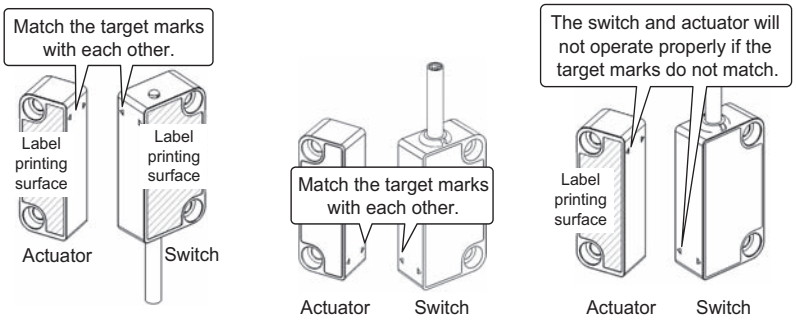

Available Available Not available

Operating Directions

When aligning the switch's target mark with the actuator's target mark, the operating direction should be on the X, Y, or Z axes.

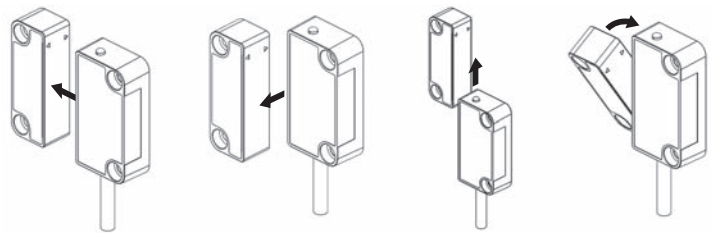

Available Available Available Not available

Mounting clearance

When two or more switches are mounted side-by-side, they must be no closer than 25 mm.

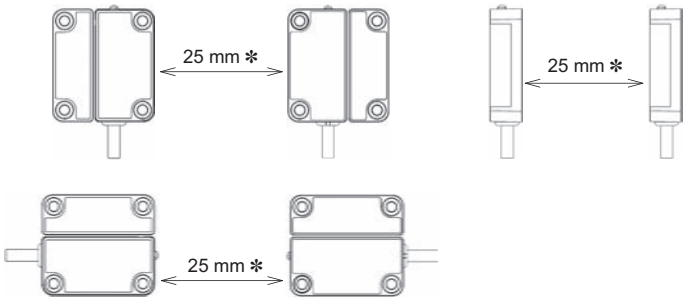

✻ When mounting side-by-side with a D40Z Switch: 50 mm min.

Indicators

LED color	Status
Red	Sensor does NOT detect actuator
Yellow	Sensor detect actuator

Connection

Internal connection

D40A-□2C□

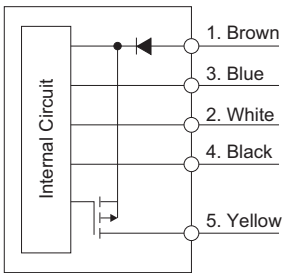

D40A-□2C015-F

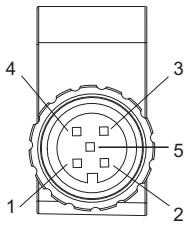

D40A-□2D□

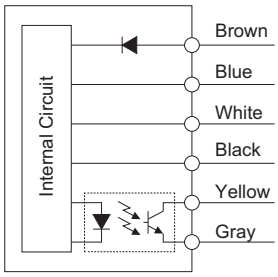

Wiring of Inputs and Outputs

Signal name		Cable color	Description of operation
Safety door switch power supply input	+	Brown	Supplies power to the safety door switch.
	-	Blue	
Safety door switch input		White	To set safety door switch output in ON state, safety door switch signal input must be in ON state.
Safety door switch output		Black	Output status depends on statuses of actuator and safety door switch signal input.
Auxiliary monitoring output		Yellow	Output status depends on status of actuator. When a fault is detected, turns into OFF state regardless of actuator status.
		Gray	

Wiring example with a safety controller

Wiring example with G9SX-NS

Connecting the D40A-2 to the G9SX-NS allows for PLe and Category 4 compliance.

Multiple switch connection

Maximum 30 switches can be connected in series.

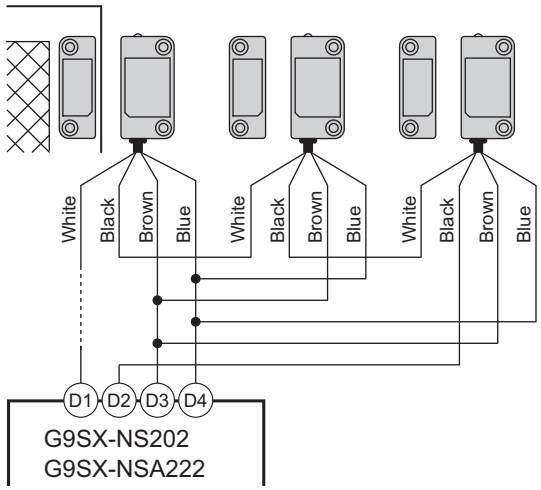

Single switch connection

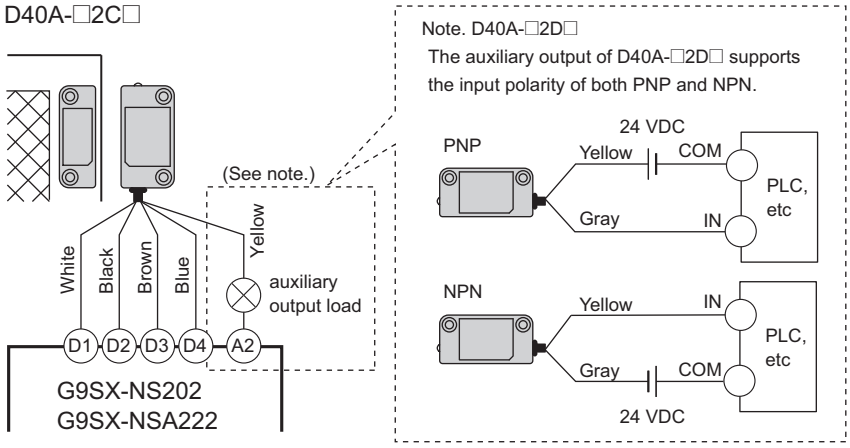

Wiring

Signal Name		Wiring color	Pin number	Description of operation
Safety door switch power input	+	Brown	1	Power supply for D40A-2□. Connect to D3 terminal and D4 terminal on G9SX-NS□.
	-	Blue	3	
Safety door switch signal input		White	2	Input designated signal from G9SX-NS□. To set safety door switch output in ON state, safety door switch input must be in ON state.
Safety door switch output		Black	4	Output status depends on actuator status and safety door switch input state.
Auxiliary output		Yellow	5	Output when sensor detect actuator.
		Gray	---	

Note: 1. When connecting a XS2F series connector with cable to a connector type, the color of the auxiliary output cable is gray.
For details, refer to the *G9SX Series Safety Controller Catalog* (Cat. No. F120).

Connection with G9SP Series

Connecting the D40A-2 to the G9SP Series allows for PLe and Category 4 compliance.

The safety door switch output (black line) from the OMRON D40A-2 is input to a Safety Input terminal. This is a one-line signal. When connecting it to the G9SP-series Controller, branch it, as shown for Si0 and Si1 in the following diagram.
Only one Test Output terminal is used. Connect the Safety Door Switch input (white line).
The inputs for up to 15 Safety Door Switch can be connected in series to one Test Output terminal.

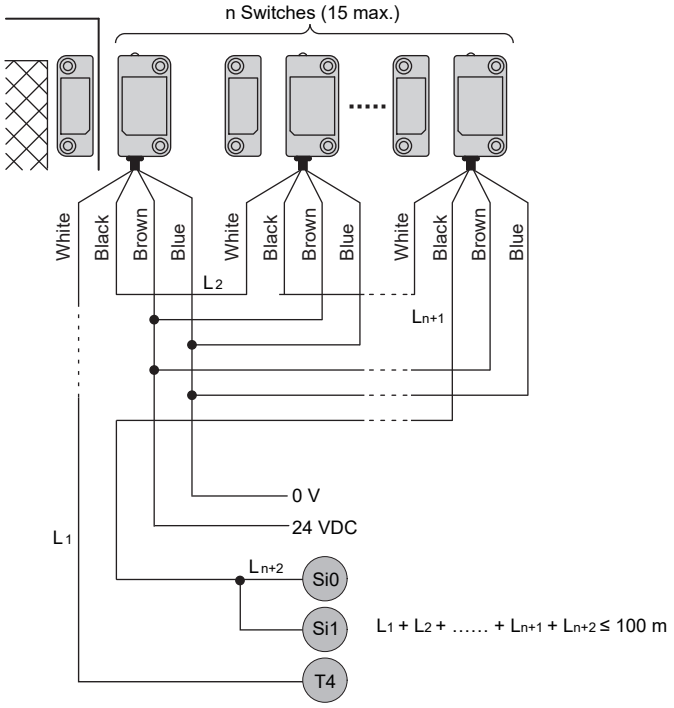

Note: 1. For details on controller settings such as reaction time and function blocks, refer to the *G9SP User's Manual* (Man. No. Z922).

- The maximum number of Switches that can be connected to a G9SP-series Controller is given below.
  G9SP-N10S : 15 (15 × 1 system)
  G9SP-N10D/20S : 30 (15 × 2 system)
- The following Test Output terminals must be used to connect to the D40A-2. Do not connect any other Test Output terminals.
  G9SP-N10S : T2
  G9SP-N10D/20S : T4 and T5
- The total wiring length (L1 + L2 +…+ L_{n+2} in the above figure) for the D40A-2 must be 100 m or less.
- Mechanical contacts and sensors cannot be used on D40A-2 input lines.
- If you use a standard model of the D40A-2 (with a cable) or if you use branch connections with the XS2F/XS2W, multiply the cable lengths by two when you calculate the total wiring length.

Wiring example with NX-SIH400

Connecting the D40A-2 to the NX Series Safety Control Unit allows for PLe and Category 4 compliance.

The safety door switch output (black line) from the OMRON D40A-2 is input to a safety input terminal. This is a one-line signal. When connecting it, branch it as shown at Si0 and Si1 in the following figure. Only one test output terminal is used. Connect the D40A-2 input (white line).

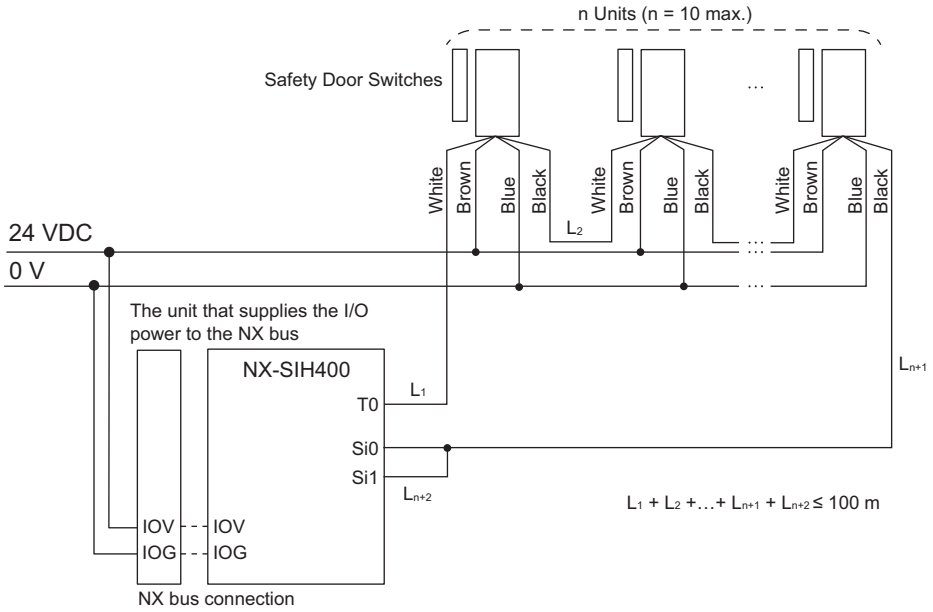

Note: 1. For details on controller settings such as reaction time, function blocks, etc., refer to the *NX Series Safety Control Unit User's Manual* (Man. No. Z930 or Z395).

- The maximum number of connections per Unit is as follows: NX-SIH400: 20 (10 connected in series × 2 series)
- You can connect up to 10 Safety Door Switches to each test output terminal.
- Mechanical contacts and sensors cannot be used on Non-contact Safety Door Switch input lines.
- You cannot branch the connections to more than one Safety Door Switch from the same test output terminal.

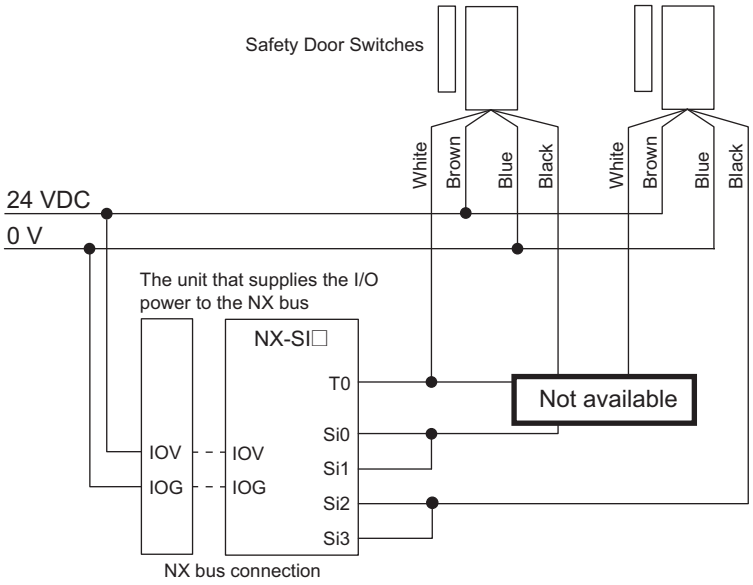

- The total wiring length (L1 + L2 +…+ L_{n+2} in the figure above) for the D40A-2 is 100 m max.

Dimensions

(Unit: mm)

Non-Contact Safety Door Switch (Switch/Actuator)
D40A-2C□/2D□
D40A-2C015-F

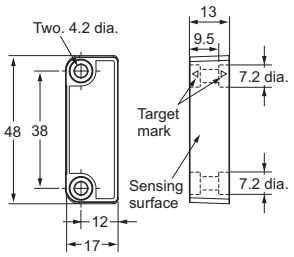

(Actuator)

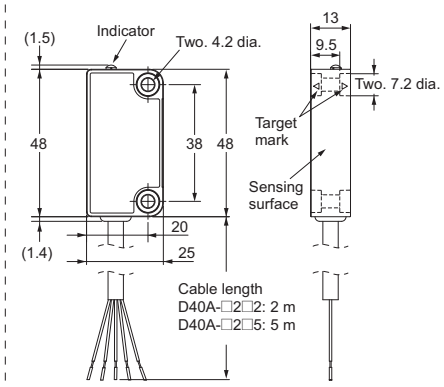

Note: The above diagram refers to D40A-□2C□ (5-core type).

(D40A-2C□/2D□)

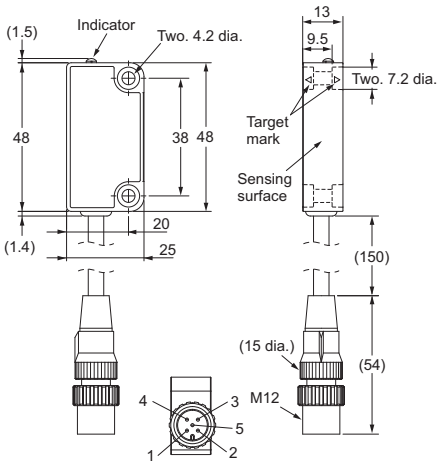

(D40A-2C015-F)

(Switch)

Switches (Sold separately)
D40A-S2C□/S2D□

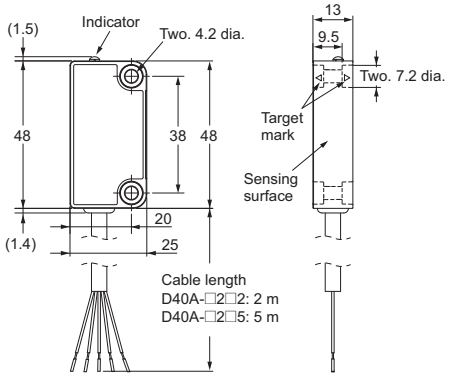

Note: The above diagram refers to D40A-□2C□ (5-core type).

D40A-S2C015-F

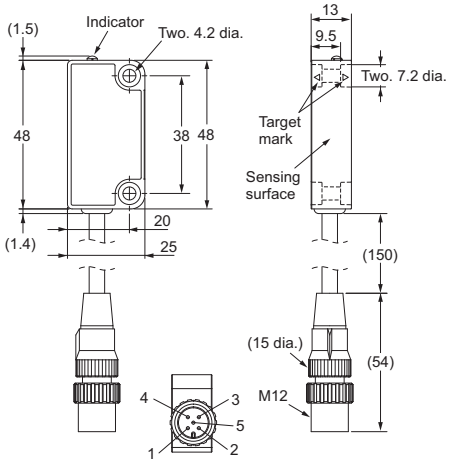

Actuator (Sold separately)
D40A-A2

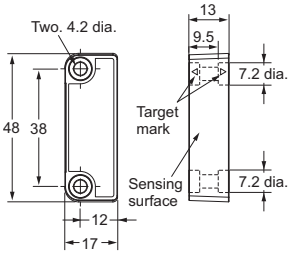

Accessory (Sold separately)

Cable with connector

Socket on One Cable End
(5-pole Connectors)
XS2F-D521-DG0-A (L=2m)
XS2F-D521-GG0-A (L=5m)
XS2F-D521-JG0-A (L=10m)
XS2F-D521-KG0-A (L=15m)
XS2F-D521-LG0-A (L=20m)

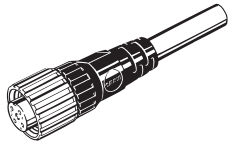

Straight Connectors

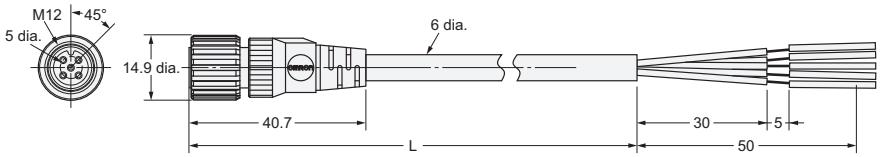

Wiring Diagram

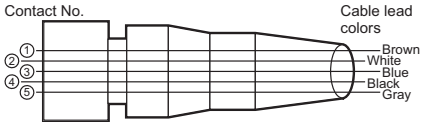

Pin Arrangements (Engagement Side)

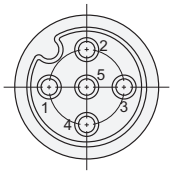

Sockets and Plugs on Cable Ends
(5-pole Connectors)
XS2W-D521-DG1-A (L=2m)
XS2W-D521-GG1-A (L=5m)
XS2W-D521-JG1-A (L=10m)
XS2W-D521-KG1-A (L=15m)
XS2W-D521-LG1-A (L=20m)

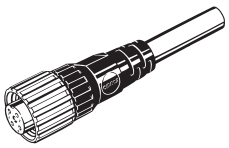

Straight/Straight Connectors

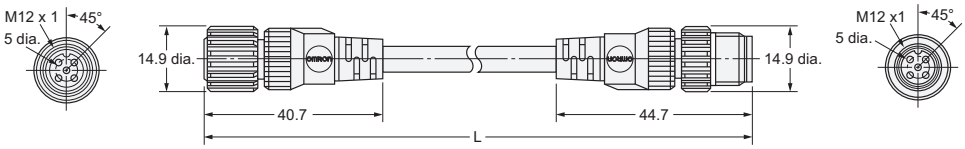

Pin Arrangements (Engagement Side) Female (socket) contacts

Wiring Diagram for 5 Cores

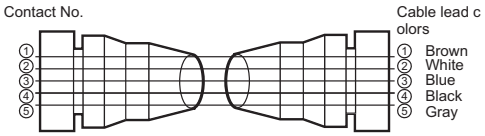

Pin Arrangements (Engagement Side) Male (plug) contacts

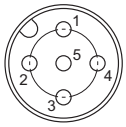

Note: For details, refer to the *XS2 Data Sheet*.

Troubleshooting

D40A-2 Indicator	G9SX-NS□ Indicator		Expected causes of the fault	Check points and measures to take
	NS	ERR	Please check in order of cause (1)	Please check in order of measure (1)
Lit off	Lit off	Lit off	(1) Fault in power supply wiring	(1) The supply voltage to D40A-2□ may be insufficient. Check if the power supply (between brown and blue lines) voltage of D40A-2□ is within the rated range. Refer to *Ratings and Specifications* on page 6.
				(2) Check that the power input lines (brown and blue) of the D40A-2□ are properly connected to the D3 and D4 terminals of the G9SX-NS□, respectively.
				(3) The wiring length or size of the wire may not be to the specification. Check the wiring length and size of the wire. Refer to *Precautions for Correct Use*.
		Light on	(2) Internal circuit failure (controller or D40A-2 failure)	(4) Refer to the troubleshoot for the controller connected to the switch. (5) If the controller is not faulty, replace with a new D40A-2.
Red light on	Lit off	Lit off	(1) Non-detection of actuator	(1) Check that the correct actuator (D40A-A2) is used and that it is installed in the correct mounting direction.
		Light on	(2) Detection of magnetic force other than actuator (D40A-A2)	(2) Keep it away from magnetic force generating objects (magnet catches, etc.). It may be affected by excessive noise.
		Light on	(3) Internal circuit failure	(3) Replace with a new D40A-2.
Yellow light on	Lit off or blinking	Light on	(1) Other D40A-2 is OFF	(1) The signal on the white line may be in the OFF state. Check the installation and wiring conditions of other D40A-2s connected to the white line.
		Light on	(2) Fault in input wiring	(2) Check if the input signal line (white) of D40A-2□ is correctly wired.
		Light on	(3) Fault in output wiring	(3) Check if the output signal line (black) of the D40A-2□ is correctly wired.
		Lit off	(4) Internal circuit failure	(4) Refer to the troubleshoot for the controller connected to the switch. (5) If the controller is not faulty, replace with a new D40A-2.
Yellow or red light on	Lit off or blinking	Blinking	(1) Noise or D40A-2 failure	The switch may be affected by excessive noise. Check the surrounding noise environment.
	Lit off	Light on	(1) Fault in Safety door switch (D40A-2) input (white)	The white line may be disconnected. Check that the white line is wired correctly, Refer to *Wiring of Inputs and Outputs* on page 9.

Refer to the respective manuals for troubleshooting with other safety controllers.

G9SP Series Safety Controller Operation Manual (Man. No. Z922)
NX Series Safety Control Unit User's Manual (Man. No. Z930)

Inspection & Maintenance

Daily inspection

Operate the product (D40A-2) and verify that the machine/system operates as intended for each product.

Periodic inspection

In addition to daily inspection, be sure to conduct inspections every 6 months.

1. Isolate all power.
2. Check the switch and actuator for proper alignment.
3. Check terminals for proper connections.
4. Check wiring for signs of damage.
5. Before resuming normal machine operation, verify that the output signal turns off for each switch/actuator when the switch and actuator are outside the operating distance.

Based on ISO 14119, if the system requires a hands-on functional test, also consider the following inspection frequencies:

- SIL3/ PL e at least once a month
- SIL2/ PL d at least once a year

Application Examples

Connection example with G9SX-NS

Highest achievable PL/safety category	Model	Stop category	Reset
PLe/4 equivalent	Non-contact Safety Door Switch D40A-2 Emergency stop pushbutton A165E/A22E Non-contact Door Switch Controller G9SX-NSA222-T03-□	0	Manual

Note: The above PL is only the evaluation result of the example. The PL must be evaluated in an actual application by the customer after confirming the usage conditions.

Application Overview

- The power supply to the motor M1 is turned OFF immediately when the emergency stop switch S1 is pressed.
- The power supply to the motor M1 is turned OFF immediately when the S2 detects that the guard is opened.
- The power supply to the motor M1 is kept OFF until the reset switch S3 is pressed while the guard is closed and the emergency stop switch S1 is released.

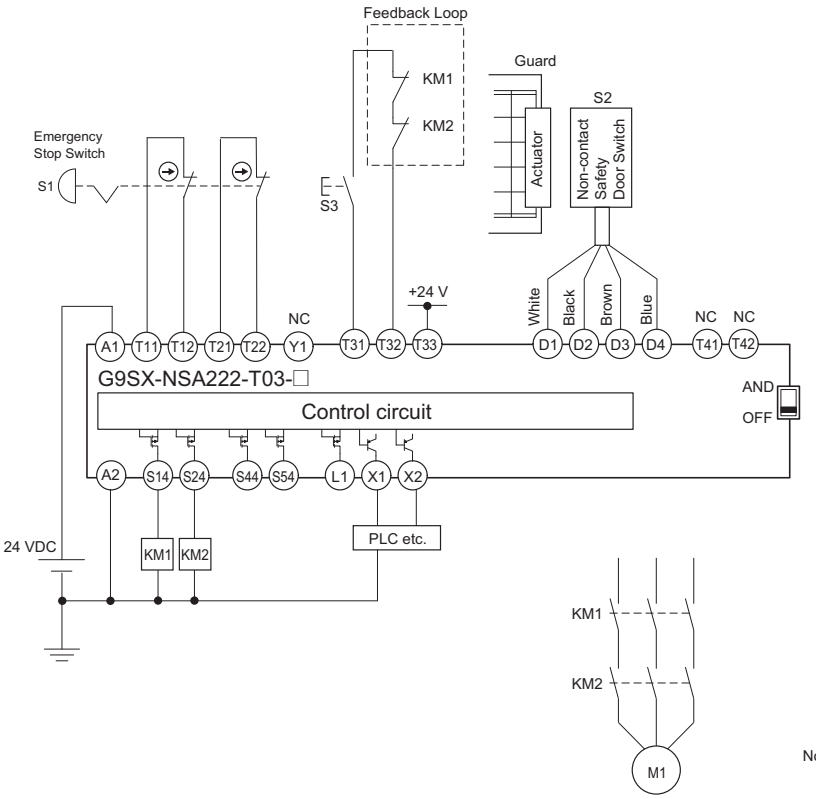

S1: Emergency Stop Switch
S2: Non-contact Safety Door Switch (D40A-2)
S3: Reset switch
KM1, KM2: Magnetic contactor
M1: Motor

Timing chart

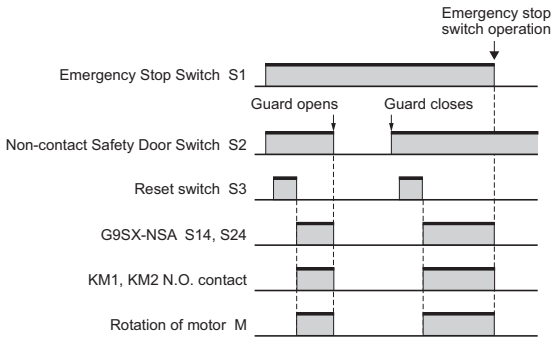

Note: For details on safety controllers, refer to the *G9SX Series Safety Controller Catalog* (Cat.No. F120).

Connection example with G9SP

Highest achievable PL/safety category	Model	Stop category	Reset
PLe/4 equivalent	Non-contact Safety Door Switch D40A-2 Emergency Stop Switch A165E/A22E Safety Controller G9SP	0	Manual

Note: The above PL is only the evaluation result of the example. The PL must be evaluated in an actual application by the customer after confirming the usage conditions.

Application Overview

- The power supply to the motor M1 is turned OFF immediately when the emergency stop switch S1 is pressed.
- The power supply to the motor M1 is turned OFF immediately when the S2 detects that the guard is opened.
- The power supply to the motor M1 is kept OFF until the reset switch S3 is pressed while the guard is closed and the emergency stop switch S1 is released.

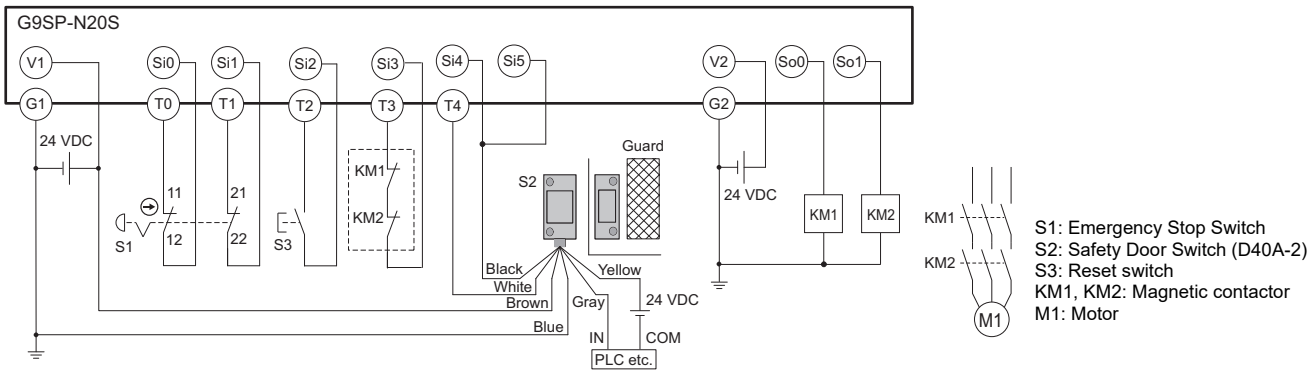

Timing chart

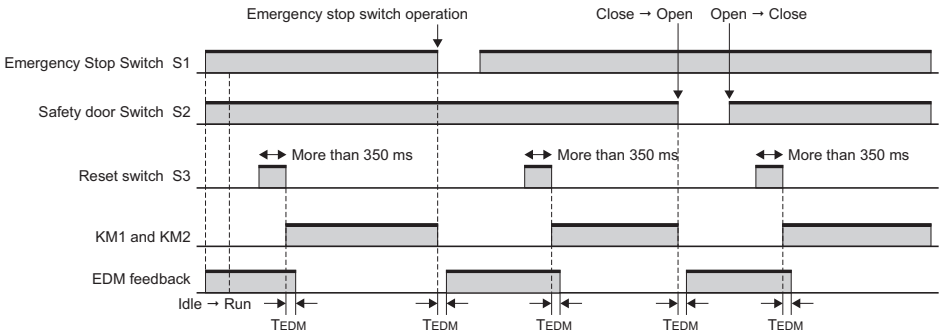

Program

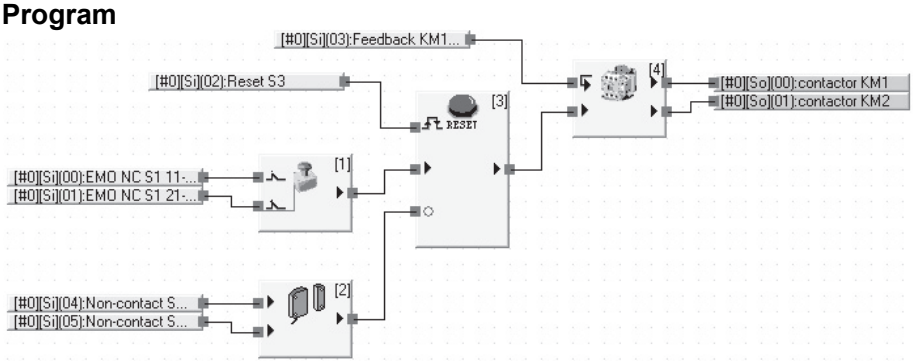

Safety I/O Terminal Settings

Input Terminals

Ter...	Name of settings	I/O Comment	Test Source
Si0	Emergency Stop Sw...	EMO NC S1 11-12	T0
Si1		EMO NC S1 21-22	T1
Si2	Reset Switch	Reset S3	T2
Si3	EDM(Contact Weldi...	Feedback KM1_KM2	T3
Si4	Non-contact Switch	Non-contact Switch...	T4
Si5		Non-contact Switch...	T4

Output Terminals

Ter...	Name of settings	I/O Comment
So0	2 Safety Relays w/ welding ...	contactor KM1
So1		contactor KM2

Note: For details on connection to a G9SP or on the program and settings of G9SP, refer to *G9SP Series Safety Controller OPERATION MANUAL* (Man. No. Z922).

Connection example with NX Series Safety Control Units (NX-SL/SI/SO)

Highest achievable PL/safety category	Model	Stop category	Reset
PLe/4 equivalent	Non-Contact Safety Door Switch D40A-2 Safety light curtain F3SG-SR Emergency stop pushbutton A165E/A22E NX-series safety input unit NX-SIH400	0	Manual

Note: The above PL is only the evaluation result of the example. The PL must be evaluated in an actual application by the customer after confirming the usage conditions.

Application Overview

- If the light in the safety light curtain S3 is interrupted and the safety door switch S4 turns OFF at the same time, the outputs are turned OFF.
- The outputs also turn OFF when emergency pushbutton S1 is pressed.

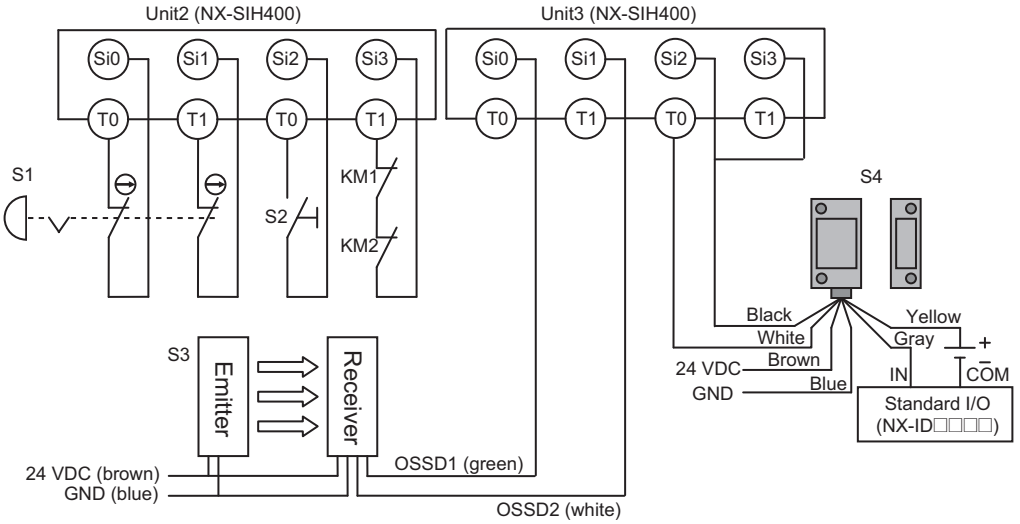

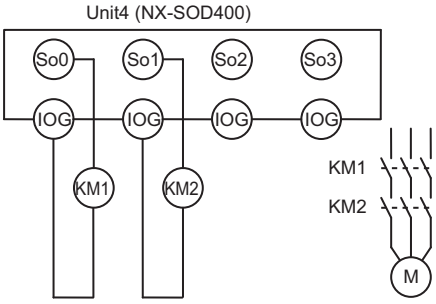

S1: Emergency stop pushbutton
S2: Reset switch
S3: Safety light curtain
S4: Safety Door Switch (D40A-2)
KM1, KM2: Contactors
M: Motor

Timing chart

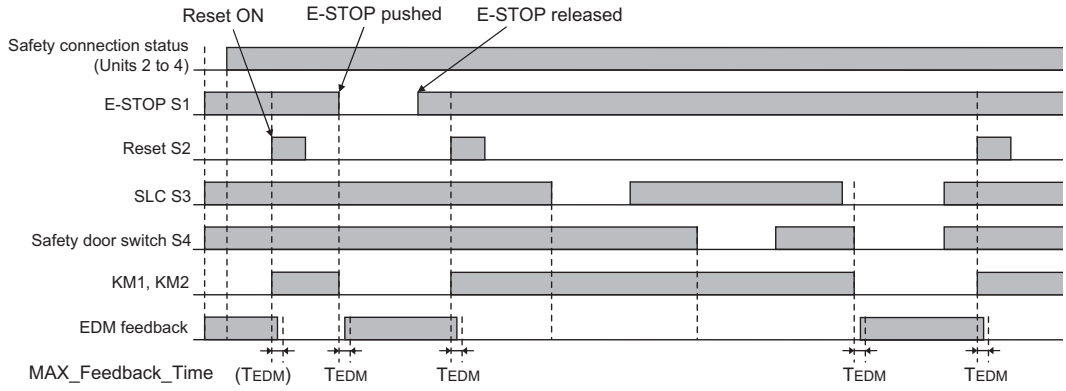

Safety I/O Terminal Settings

Node1/Unit2 : NX-SIH400 (N2 : Instance0)

External Device	Channel	Discrepancy	On-Off	Off-On	Test Source	Comment
Mechanical Contact for Dual Channel Equivalent	Si 0	500ms	0ms	0ms	T0	Emergency Stop Pushbutton Switch(2NC)
	Si 1	500ms	0ms	0ms	T1	
Mechanical Contact For Single Channel	Si 2	0ms	0ms	0ms	T0	Reset Switch
Mechanical Contact For Single Channel	Si 3	0ms	0ms	0ms	T1	EDM(Contact Welding Detection)

Node1/Unit3 : NX-SIH400 (N3 : Instance1)

External Device	Channel	Discrepancy	On-Off	Off-On	Test Source	Comment
Semiconductor Output for Dual Channel Equivalent	Si 0	500ms	0ms	0ms	Not Used	Safety Light Curtain
	Si 1	500ms	0ms	0ms	Not Used	
Non-contact switch	Si 2	0ms	0ms	0ms	T0	Non-contact Door Switch
	Si 3	0ms	0ms	0ms	T0	

Node1/Unit4 : NX-SOD400 (N4 : Instance2)

External Device	Channel	Comment
Dual Output with Test Pulse	So 0	2 Safety Relays w/ Welding Check
	So 1	
	So 2	
	So 3	

I/O Map Settings

Position	Port	R/W	Data Type	Variable	Variable Comment	Variable Type
	EtherCAT Network					
EtherCAT Master	Master					
Node1/Unit2	NX-SIH400					
	Safety Inputs and Status					
	Si00 Logical Value	R	SAFEBOOL	EMO_NC_S1	Emergency Stop Pushbutton Switch S1	Global Variables
	Si01 Logical Value	R	SAFEBOOL			
	Si02 Logical Value	R	SAFEBOOL	Reset_S2	Reset Switch S2	Global Variables
	Si03 Logical Value	R	SAFEBOOL	Feedback_KM1_KM2	Welding Check KM1_KM2	Global Variables
	Safety Connection Status	R	SAFEBOOL	SCS_Unit2	Safety Connection Status Unit2	Global Variables
	Safety Input Terminal Status	R	SAFEBOOL			
Node1/Unit3	NX-SIH400					
	Safety Inputs and Status					
	Si00 Logical Value	R	SAFEBOOL	SLC_S3	Safety Light Curtain S3	Global Variables
	Si01 Logical Value	R	SAFEBOOL			
	Si02 Logical Value	R	SAFEBOOL	Non_contactSW_S4	Non-contact Door Switch S4	Global Variables
	Si03 Logical Value	R	SAFEBOOL			
	Safety Connection Status	R	SAFEBOOL	SCS_Unit3	Safety Connection Status Unit3	Global Variables
	Safety Input Terminal Status	R	SAFEBOOL			
Node1/Unit4	NX-SOD400					
	Status					
	Safety Connection Status	R	SAFEBOOL	SCS_Unit4	Safety Connection Status Unit4	Global Variables
	Safety Output Terminal Status	R	SAFEBOOL			
	Safety Outputs					
	So00 Output Value	W	SAFEBOOL	Contactor_KM1_KM2	Contactor KM1_KM2	Global Variables
	So01 Output Value	W	SAFEBOOL			
	So02 Output Value	W	SAFEBOOL			
	So03 Output Value	W	SAFEBOOL			

Program

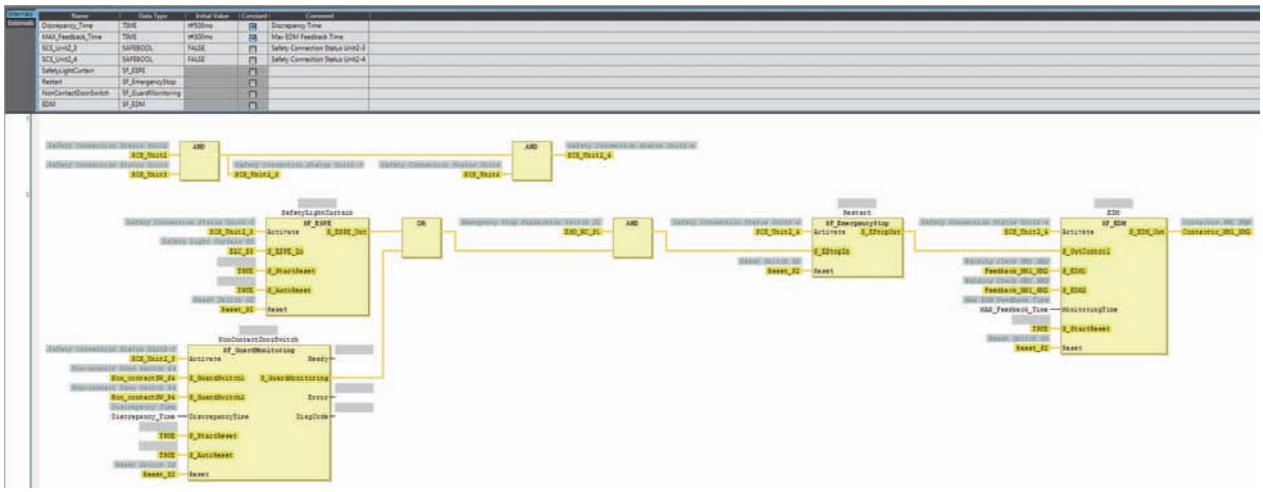

Note: For details on programming and configuration of the safety controller, refer to the *NX Series Safety Control Unit User's Manual* (Man. No. Z930).

Safety Precautions

Be sure to read the precautions for all models in the website at: http://www.ia.omron.com/.

Warning Indications

⚠ WARNING	Indicates a potentially hazardous situation which, if not avoided, will result in minor or moderate injury, or may result in serious injury or death. Additionally there may be significant property damage.
Precautions for Safe Use	Supplementary comments on what to do or avoid doing, to use the product safely.
Precautions for Correct Use	Supplementary comments on what to do or avoid doing, to prevent failure to operate, or undesirable effect on product performance.

Meaning of Product Safety Symbols

	General instructions Instructions on unspecified general action.
	General prohibition Instructions on unspecified prohibited action.

⚠ WARNING

Use only appropriate components or devices complying with relevant safety standards corresponding to the required performance level and category. Conformity to requirements of the performance level category must be determined as an entire system. It is recommended to consult a certification body regarding assessment of conformity to the required safety level.

Serious injury may occur in an accident. Make sure to use the dedicated actuator D40A-A2, and install the switch and actuator at an appropriate distance so that they do not create a gap that provides access to the hazard.

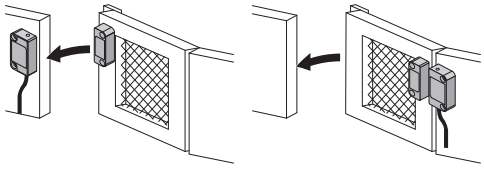

Available Not available

Serious injury may occur in an accident. When complying with safety standards, install the product in accordance with ISO/EN ISO 14119 with due consideration of the risk of the operator deactivating it.

Auxiliary output is NOT a safety output. Do not use the Auxiliary output individually for any safety function. Such incorrect use causes loss of the safety function of the product and its relevant systems.

Serious injury may possibly occur in an accident. Do not put the actuator or magnet close to the switch when the door is opened.

Be sure to inspect the product daily and every 6 months. Otherwise, serious injury may possibly occur due to the system malfunction.

Precautions for Safe Use

1. Dispose of the product in accordance with the laws set by each country.
2. Wire the input and output terminals correctly and verify the correct operation of the product before using the system in which the product is incorporated. Incorrect wiring may lead to loss of the safety function.
3. After the installation of the product, responsible personnel must ensure that the installation, inspection, and maintenance are carried out correctly. These personnel must be qualified and authorized to ensure safety throughout each phase of design, installation, running, maintenance, and disposal of the system.
4. Tighten each screw with specified torque by using M4 screws with a screw head diameter of up to 7mm or less for the installation of the switch and actuator. After installation and commissioning, the fixing screws for the switch and actuator should be coated with tamper-proof varnish or a similar compound to prevent loosening. Using anaerobic locking compounds can damage the plastic case of each switch and actuator if the compounds come into contact with the case.
5. Serious injury may occur in an accident. Do not apply DC voltages exceeding the rated voltages, nor any AC voltages to the product.

Precautions for Correct Use

1. Use with an appropriate controller. Check the instruction sheet of the Safety Controller before use.
2. Do not drop the product to the ground or expose to vibration or mechanical shocks out of the rated values. Doing so may damage the product and cause failure.
3. Do not store or installation the product in the following places. Doing so may result in product failure, or incorrect operation.
   - Places subject to direct sunlight
   - Operation in the range exceeding -25°C to 70°C
     Storage at temperatures exceeding -25°C to 75°C
   - Operation in the range of relative humidity exceeding 25% to 85%
     Storage at relative humidity exceeding 25% to 95%
     Places subject to condensation due to sudden temperature changes
   - Places subject to corrosive or flammable gases
   - Places subject to vibration or mechanical shocks exceeding the rated values to the product
   - Operation in locations subject to exposure to oil, or chemicals
     Storage in locations subject to exposure to water, oil, or chemicals
   - Places subject to dust, salt, or iron particles
   - Places subject to iron cuttings or particles, etc. are directly exposed
4. Do not mount the switch and actuator on magnetic materials, otherwise it may affect the operating distance.
   Refer to the chart below for the estimated influence.

Distance from magnetic materials	Operating distance
Less than 5 mm	Operates approximately 90% of the original value
5 mm Min.	Operation is not affected

5. Wiring
   - Use the following wire sizes for wiring.
     - Stranded wire: 0.2 to 2.5 mm^2 AWG24 to AWG12
     - Solid wire: 0.2 to 2.5 mm^2 AWG24 to AWG12
   - When not using the auxiliary output, cut and insulate the unused wires to prevent contact with other terminals.
   - If laying an additional cable of 20 m or longer, bundle the white, black, brown and blue lines together.
6. Do not use the product as a stopper. Keep the distance between switch and actuator at least 1 mm.
7. Handling the Cables:
   - When bending cables for wiring, the bending radius shall be 6 times or more than the cable outer diameter.
   - Do not apply a tensile strength of 50 N or greater to the cables.
8. When two or more Switches are mounted side-by-side, they must be no closer than the following distance.

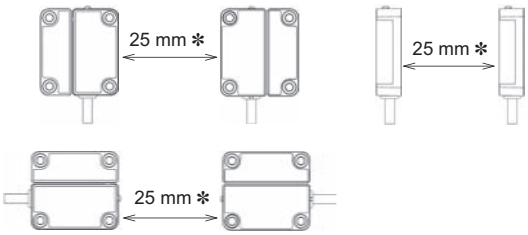

✻ When mounting side-by-side with a D40Z Switch: 50 mm min.

9. Do not use the product at an altitude of 2,000 m or higher.
10. The degree of protection does not guarantee performance in environments with continuous water exposure. Do not use the product in water. Doing so may lead to water entered into the product.
    Conditions for the degree of protection
    - Temperature range: 15 to 35°C, Humidity: 25 to 75%,
    - Atmospheric pressure: 86 to 106 kpa

11. Never disassemble, repair, or modify the product. Doing so may cause loss of the safety function.
12. Do not use the product in magnetic fields greater than 1.0 mT. The product may not function properly.
13. Insert the surge absorber as follows:
- D40A-□2C□: Between the blue wire and the white, black, brown, and yellow wires
- D40A-□2D□: Between the blue wire and the white, black, and brown wires, and between the yellow wire and the gray wire

The recommended surge absorber specifications are as follows:
- Peak pulse power: 600 W (10/1000 μs) or more (Per IEC 61000-4-5 (surge immunity))
- Breakdown voltage: 30 to 35 V

14. Do not allow the product to come into contact with oil or solvents. The oil or solvents can cause the markings on the product to become illegible and lead to deterioration of certain parts.
15. In a residential environment, this product may cause radio interference, in which case the user may be required to take adequate measures.
16. Use the product under the following conditions for in-series connection.
- Connect up to 30 units of the product.
- Wire the product in series according to the following conditions for the total wiring length. The supply voltage to the product may decrease due to voltage drop depending on the cables or the wiring configuration.
  Make sure the power supply voltage for the product is within the rated range.

30 or less the D40A-1□ series, D40A-2□ series or D40Z connected.

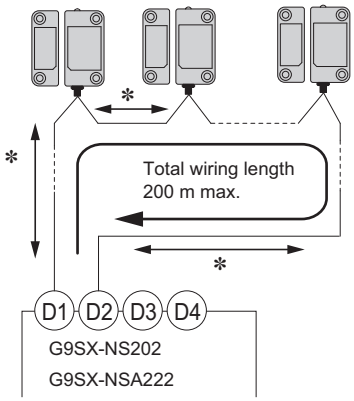

* The wiring length between the products must be 100 m max.

Auxiliary output load

The auxiliary output load current of the D40A-□2C□ must be met the following conditions.

When using G9SX-NS202	
Possible for up to 15 Units	50 mA max.
16 to 20 Units	30 mA max.
21 to 30 Units	20 mA max.

When using G9SX-NSA222	
Possible for up to 30 Units	50 mA max.

- The D40A-2 series connected in series can be used together with the D40A series (D40A-1C□) or the D40Z series. However, the D40A series (D40A-1C□) and the D40Z series cannot be used together.

Trademarks
- Ecolab and its logo are registered trademarks of Ecolab USA Inc.
- Other company names and product names in this document are the trademarks or registered trademarks of their respective companies

Copyrights
- Some images are used under license from Shutterstock.com
- Microsoft product screen shots reprinted with permission from Microsoft Corporation.
- The product photographs and figures that are used in this catalog may vary somewhat from the actual products.

Terms and Conditions Agreement

Read and understand this catalog.

Please read and understand this catalog before purchasing the products. Please consult your OMRON representative if you have any questions or comments.

Warranties.

(a) Exclusive Warranty. Omron's exclusive warranty is that the Products will be free from defects in materials and workmanship for a period of twelve months from the date of sale by Omron (or such other period expressed in writing by Omron). Omron disclaims all other warranties, express or implied.

(b) Limitations. OMRON MAKES NO WARRANTY OR REPRESENTATION, EXPRESS OR IMPLIED, ABOUT NON-INFRINGEMENT, MERCHANTABILITY OR FITNESS FOR A PARTICULAR PURPOSE OF THE PRODUCTS. BUYER ACKNOWLEDGES THAT IT ALONE HAS DETERMINED THAT THE PRODUCTS WILL SUITABLY MEET THE REQUIREMENTS OF THEIR INTENDED USE.

Omron further disclaims all warranties and responsibility of any type for claims or expenses based on infringement by the Products or otherwise of any intellectual property right. (c) Buyer Remedy. Omron's sole obligation hereunder shall be, at Omron's election, to (i) replace (in the form originally shipped with Buyer responsible for labor charges for removal or replacement thereof) the non-complying Product, (ii) repair the non-complying Product, or (iii) repay or credit Buyer an amount equal to the purchase price of the non-complying Product; provided that in no event shall Omron be responsible for warranty, repair, indemnity or any other claims or expenses regarding the Products unless Omron's analysis confirms that the Products were properly handled, stored, installed and maintained and not subject to contamination, abuse, misuse or inappropriate modification. Return of any Products by Buyer must be approved in writing by Omron before shipment. Omron Companies shall not be liable for the suitability or unsuitability or the results from the use of Products in combination with any electrical or electronic components, circuits, system assemblies or any other materials or substances or environments. Any advice, recommendations or information given orally or in writing, are not to be construed as an amendment or addition to the above warranty.

See http://www.omron.com/global/ or contact your Omron representative for published information.

Limitation on Liability; Etc.

OMRON COMPANIES SHALL NOT BE LIABLE FOR SPECIAL, INDIRECT, INCIDENTAL, OR CONSEQUENTIAL DAMAGES, LOSS OF PROFITS OR PRODUCTION OR COMMERCIAL LOSS IN ANY WAY CONNECTED WITH THE PRODUCTS, WHETHER SUCH CLAIM IS BASED IN CONTRACT, WARRANTY, NEGLIGENCE OR STRICT LIABILITY.

Further, in no event shall liability of Omron Companies exceed the individual price of the Product on which liability is asserted.

Suitability of Use.

Omron Companies shall not be responsible for conformity with any standards, codes or regulations which apply to the combination of the Product in the Buyer's application or use of the Product. At Buyer's request, Omron will provide applicable third party certification documents identifying ratings and limitations of use which apply to the Product. This information by itself is not sufficient for a complete determination of the suitability of the Product in combination with the end product, machine, system, or other application or use. Buyer shall be solely responsible for determining appropriateness of the particular Product with respect to Buyer's application, product or system. Buyer shall take application responsibility in all cases.

NEVER USE THE PRODUCT FOR AN APPLICATION INVOLVING SERIOUS RISK TO LIFE OR PROPERTY OR IN LARGE QUANTITIES WITHOUT ENSURING THAT THE SYSTEM AS A WHOLE HAS BEEN DESIGNED TO ADDRESS THE RISKS, AND THAT THE OMRON PRODUCT(S) IS PROPERLY RATED AND INSTALLED FOR THE INTENDED USE WITHIN THE OVERALL EQUIPMENT OR SYSTEM.

Programmable Products.

Omron Companies shall not be responsible for the user's programming of a programmable Product, or any consequence thereof.

Performance Data.

Data presented in Omron Company websites, catalogs and other materials is provided as a guide for the user in determining suitability and does not constitute a warranty. It may represent the result of Omron's test conditions, and the user must correlate it to actual application requirements. Actual performance is subject to the Omron's Warranty and Limitations of Liability.

Change in Specifications.

Product specifications and accessories may be changed at any time based on improvements and other reasons. It is our practice to change part numbers when published ratings or features are changed, or when significant construction changes are made. However, some specifications of the Product may be changed without any notice. When in doubt, special part numbers may be assigned to fix or establish key specifications for your application. Please consult with your Omron's representative at any time to confirm actual specifications of purchased Product.

Errors and Omissions.

Information presented by Omron Companies has been checked and is believed to be accurate; however, no responsibility is assumed for clerical, typographical or proofreading errors or omissions.

Note: Do not use this document to operate the Unit.

OMRON Corporation **Industrial Automation Company**

Kyoto, JAPAN **Contact : www.ia.omron.com**

Regional Headquarters

OMRON EUROPE B.V.
Wegalaan 67-69, 2132 JD Hoofddorp
The Netherlands
Tel: (31) 2356-81-300 Fax: (31) 2356-81-388

OMRON ELECTRONICS LLC
2895 Greenspoint Parkway, Suite 200
Hoffman Estates, IL 60169 U.S.A.
Tel: (1) 847-843-7900 Fax: (1) 847-843-7787

OMRON ASIA PACIFIC PTE. LTD.
438B Alexandra Road, #08-01/02 Alexandra
Technopark, Singapore 119968
Tel: (65) 6835-3011 Fax: (65) 6835-3011

OMRON (CHINA) CO., LTD.
Room 2211, Bank of China Tower,
200 Yin Cheng Zhong Road,
PuDong New Area, Shanghai, 200120, China
Tel: (86) 21-6023-0333 Fax: (86) 21-5037-2388

Authorized Distributor:

©OMRON Corporation 2024 All Rights Reserved.
In the interest of product improvement,
specifications are subject to change without notice.

CSM_2_2
Cat. No. F133-E1-03 0924 (0524)