KSB1F

PLASTIC MICRO SWITCH, K SERIES, TOP ROLLER PUSH PLUNGER. M12 FIXING HEAD. CONTACTS 1NO/NC. FASTON TERMINALS

General characteristics			
Material			
	Housing		Polymer thermoplastic
Contact characteristics			
Type of contact			1NO/NC
Thermal current Ith		A	15
IEC/EN 60947-5-1 designation			A600 P300
Rated insulation voltage Ui		V	250
Switching speed			
	min	m/s	0.01
	max	m/s	1
Operating speed			
	min	m/s	0.05
	max	m/s	1
IEC Conventional free air thermal current Ith ≤ 40°C		A	15
Resistance per pole (average value)		mΩ	<15
Conductivity			10mA 5V
Mechanical features			
Terminals type			Faston
Operating head fixing			Fixed
Operating torque			
		N	2.5
		ozin	9
Weight		g	58
Operations			
Mechanical life		cycles	20000000
Electrical life		cycles	500000
Mechanical operation		cycles/h	240
Ambient conditions			
Temperature			
Operating temperature			
	min	°C	-25
	max	°C	+70
Storage temperature			
	min	°C	-40
	max	°C	+70
Resistance & Protection			
IP degree			
	Body housing		IP00 or IP20 with terminal shroud
Pollution degree			3
Dimensions			

The characteristics described in this document are subject to updates or modifications at any time. The descriptions, technical and functional information, illustrations and instructions in this brochure are purely illustrative, and are consequently not contractually binding

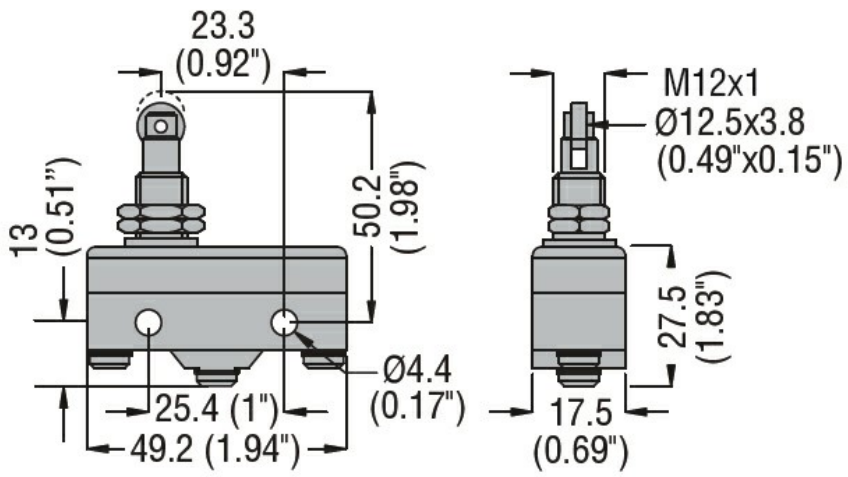

Wiring diagrams

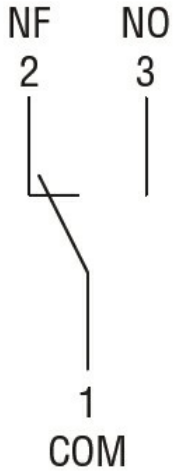

Certifications and compliance

Compliance	
	CSA C22.2 n° 14.
	IEC/EN 60947-1
	IEC/EN 60947-5-1
	IEC/EN 61058-1
	UL508
Certificates	
	cURus
	EAC

ETIM classification

ETIM 8.0	EC000030 - End switch

The characteristics described in this document are subject to updates or modifications at any time. The descriptions, technical and functional information, illustrations and instructions in this brochure are purely illustrative, and are consequently not contractually binding