KMF1L12

LIMIT SWITCH, K SERIES, ADJUSTABLE ROLLER LEVER, 1 BOTTOM CABLE ENTRY. DIMENSIONS TO EN 50047, METAL BODY, CONTACTS 1NO+2NC SLOW ACTION. PLASTIC ROLLER



General characteristics			
Material			
	Housing		Aluminium-zinc alloy
	Roller		Plastic
Contact characteristics			
Type of contact			1NO+2NC Slow action
Thermal current Ith		A	10
IEC/EN 60947-5-1 designation			A300 Q300
Rated insulation voltage Ui		V	440
Rated impulse withstand voltage Uimp		kV	4
Short-circuit protection with fuse		Class/A	10 gG/SC QUICK FUSE
Switching speed			
	min	m/s	0.5
	max	m/s	1.5
IEC Conventional free air thermal current Ith ≤ 40°C		A	10
Resistance per pole (average value)		mΩ	<10
Mechanical features			
Operating head fixing			Locking bayonet insert
Operating torque			
		Ncm	3
		ozin	4.25
Tightening torque (Max)			
Switch fixing			
		Nm	2.5
		lbin	22.1
Contact terminals			
		Nm	0.8
		lbin	7
Body lid screw fixing			
		Nm	0.8
		lbin	7
Conductor section			
AWG/Kcmil			
	min		16
	max		14
IEC			
	min	mm²	1.5
	max	mm²	2.5
Cable connection			Self-releasing screw terminal
Cable entry			M20 on the bottom

The characteristics described in this document are subject to updates or modifications at any time. The descriptions, technical and functional information, illustrations and instructions in this brochure are purely illustrative, and are consequently not contractually binding

KMF1L12

LIMIT SWITCH, K SERIES, ADJUSTABLE ROLLER LEVER, 1 BOTTOM CABLE ENTRY. DIMENSIONS TO EN 50047, METAL BODY, CONTACTS 1NO+2NC SLOW ACTION. PLASTIC ROLLER

Operations

Mechanical life		cycles	<10000000
Mechanical operation		cycles/h	3600

Ambient conditions

Temperature

Operating temperature			
	min	°C	-25
	max	°C	+70
Storage temperature			
	min	°C	-40
	max	°C	+70

Resistance & Protection

IP degree

Terminals		IP20
Body housing		IP65
Pollution degree		3

Dimensions

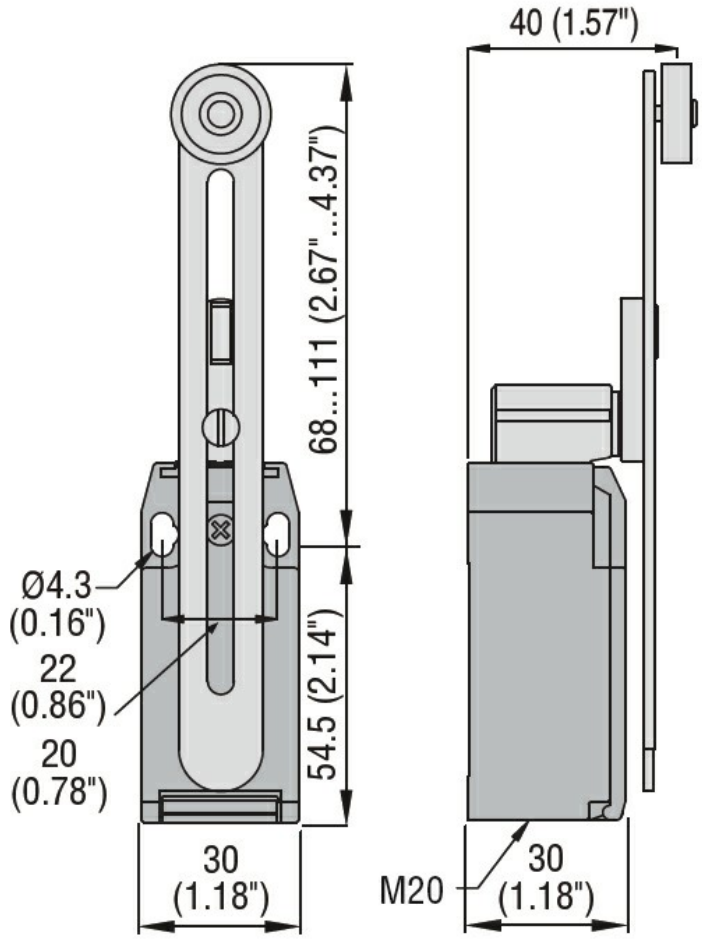

Wiring diagrams

The characteristics described in this document are subject to updates or modifications at any time. The descriptions, technical and functional information, illustrations and instructions in this brochure are purely illustrative, and are consequently not contractually binding

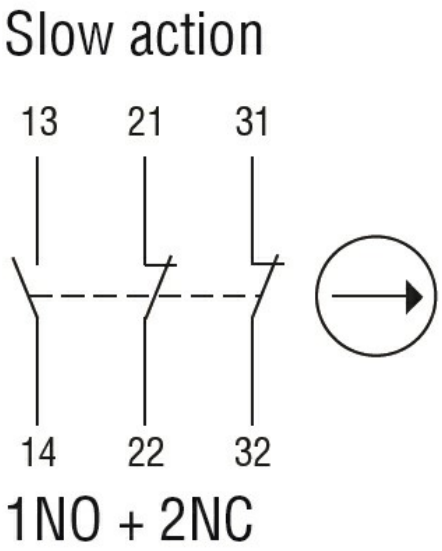

Certifications and compliance

Compliance

CSA C22.2 n° 14
EN 50047
IEC/EN 60204-1
IEC/EN 60947-1
IEC/EN 60947-5-1
UL508

Certificates

CCC
cULus
EAC

ETIM classification

ETIM 8.0	EC000030 - End switch

The characteristics described in this document are subject to updates or modifications at any time. The descriptions, technical and functional information, illustrations and instructions in this brochure are purely illustrative, and are consequently not contractually binding