BFA0507002460

COMPLETA STAR-DELTA STARTER, OPEN FRAME, FOR STARTING TIME UP TO 12 SECONDS AND A MAXIMUM OF 30 OPERATIONS/HOUR, MAX IEC OPERATING CURRENT 85A. COIL VOLTAGE 24VAC 60HZ

Electrical features

Maximum operating current (≤440V)	A	85

Components

Contactor standard supplied	BF5000A / BF5000A / BF3200A
Thermal relay standard supplied	No
Thermal relay to purchase separately	RF82
Auxiliary contact standard supplied	BFX1020 / BFX1011 / BFX1011

Contact characteristics

IEC standard motor powers

230V	kW	25
400V	kW	45
440V	kW	45
500V	kW	59

Mechanical features

Weight	g	5200

Dimensions

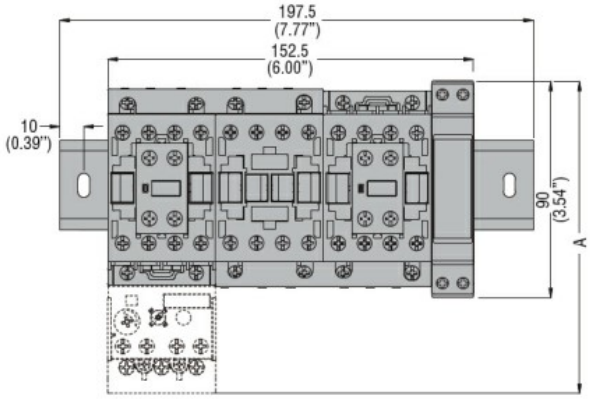

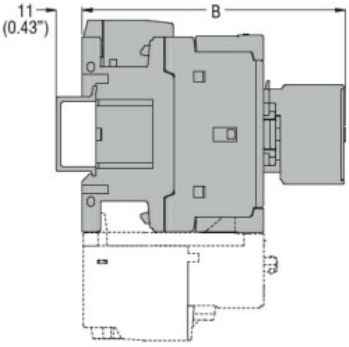

STARTER TYPE	A	B
BFA009 70	130.5 (5.14")	109.5 (4.31")
BFA012 70	130.5 (5.14")	109.5 (4.31")
BFA018 70	130.5 (5.14")	109.5 (4.31")
BFA025 70	130.5 (5.14")	109.5 (4.31")
BFA026 70	135 (5.14")	119 (4.68")
BFA032 70	135 (5.14")	119 (4.68")
BFA038 70	135 (5.14")	119 (4.68")
BFA050 70	173 (6.81")	142 (5.59")
BFA065 70	173 (6.81")	142 (5.59")
BFA080 70	183 (7.20")	142 (5.59")

Wiring diagrams

The characteristics described in this document are subject to updates or modifications at any time. The descriptions, technical and functional information, illustrations and instructions in this brochure are purely illustrative, and are consequently not contractually binding

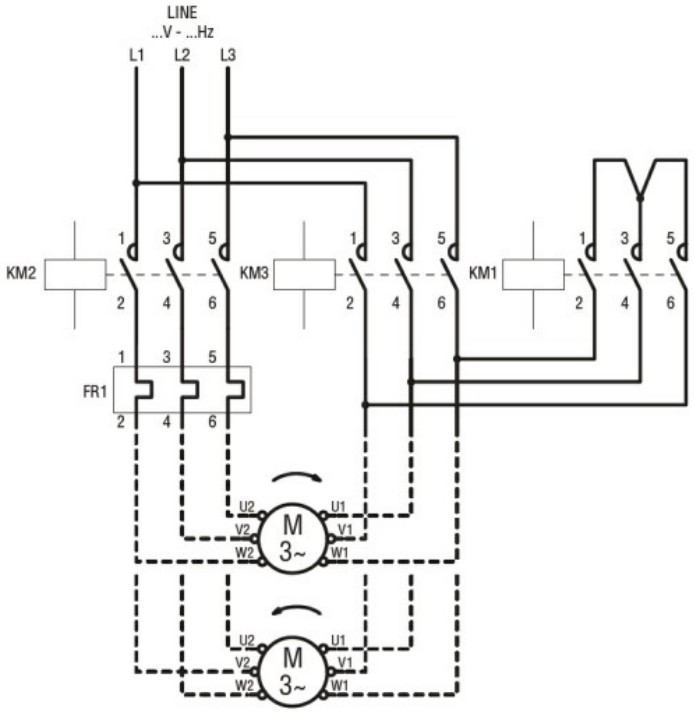

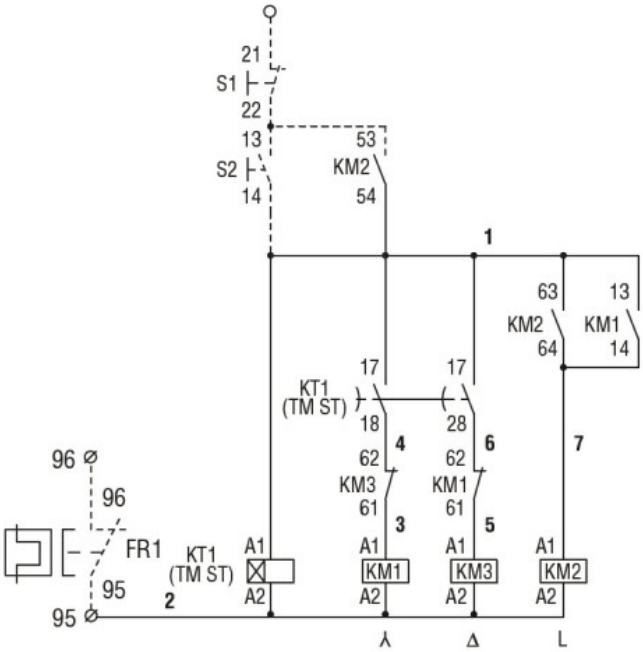

Certifications and compliance

Compliance	
	IEC/EN 60947-1
	IEC/EN 60947-4-9
Certificates	
	/

ETIM classification

ETIM 8.0	EC001037 - Motor starter/Motor starter combination

The characteristics described in this document are subject to updates or modifications at any time. The descriptions, technical and functional information, illustrations and instructions in this brochure are purely illustrative, and are consequently not contractually binding