BF420T4E110

FOUR-POLE CONTACTOR, IEC OPERATING CURRENT ITH (AC1) = 630A, AC/DC COIL, 60… 130VAC/DC



Contact characteristics			
Number of poles		Nr.	4
Rated insulation voltage Ui IEC/EN		V	1000
Rated impulse withstand voltage Uimp		kV	8
Operational frequency			
	min	Hz	25
	max	Hz	400
IEC Conventional free air thermal current Ith ≤ 40°C		A	630
Operational current Ie			
	AC-1 (≤40°C)	A	600
	AC-1 (≤55°C)	A	530
	AC-1 (≤70°C)	A	460
	AC-3 (≤440V ≤55°C)	A	420
	AC-4 (400V)	A	200
Rated operational power AC-3 (T≤55°C)			
	230V	kW	132
	400V	kW	200
	415V	kW	250
	440V	kW	250
	500V	kW	250
	690V	kW	355
	1000V	kW	170
Rated operational current AC-3 (T≤55°C)			
	230V	A	420
	400V	A	420
	415V	A	420
	440V	A	420
	500V	A	344
	690V	A	354
	1000V	A	170
Rated operational power AC-1 (T≤40°C)			
	230V	kW	238
	400V	kW	436
	500V	kW	480
	690V	kW	753
IEC max current Ie in DC1 with L/R ≤ 1ms with 3 poles in series			
	330V	A	350
IEC max current Ie in DC3-DC5 with L/R ≤ 15ms with 3 poles in series			
	330V	A	280
IEC max current Ie in DC3-DC5 with L/R ≤ 15ms with 4 poles in series			
	330V	A	350
	460V	A	280
Short-time allowable current for 10s (IEC/EN60947-1)		A	3360
Protection fuse			
	gG (IEC)	A	800

The characteristics described in this document are subject to updates or modifications at any time. The descriptions, technical and functional information, illustrations and instructions in this brochure are purely illustrative, and are consequently not contractually binding

		aM (IEC)	A	500
Making capacity (RMS value)			A	4200
Breaking capacity at voltage				
		440V	A	4200
		500V	A	2752
		690V	A	2832
Resistance per pole (average value)			mΩ	0.09
Power dissipation per pole (average value)				
		Ith	W	37
		AC-3	W	18
Tightening torque for terminals				
		min	Nm	55
		max	Nm	55
		min	lbin	486
		max	lbin	486
Tightening torque for coil terminal				
		min	Nm	0.8
		max	Nm	1
		min	lbin	7.1
		max	lbin	8.8
Power terminal protection according to IEC/EN 60529				IP00
Mechanical features				
Operating position				
		normal		Vertical plan
		allowable		±30°
Fixing				Screw
Operations				
Mechanical life			cycles	5000000
Electrical life			cycles	700000
Safety related data				
Performance level B10d according to EN/ISO 13489-1				
		rated load	cycles	700000
		mechanical load	cycles	5000000
EMC compatibility				yes
AC coil operating				
Rated AC voltage at 50/60Hz, 60Hz				
		min	V	60
		max	V	130
AC operating voltage				
	of 50/60Hz coil powered at 50Hz			
	pick-up			
		min	%Us	80 Us min
		max	%Us	110 Us max
	drop-out			
		max	%Us	≤70 Us min
	of 50/60Hz coil powered at 60Hz			
	pick-up			
		min	%Us	80 Us min
		max	%Us	110 Us max
	drop-out			
		max	%Us	≤70 Us min
AC average coil consumption at 20°C				
	of 50/60Hz coil powered at 50Hz			

The characteristics described in this document are subject to updates or modifications at any time. The descriptions, technical and functional information, illustrations and instructions in this brochure are purely illustrative, and are consequently not contractually binding

			in-rush	VA	390
			holding	VA	12
	of 50/60Hz coil powered at 60Hz				
			in-rush	VA	390
			holding	VA	12
Dissipation at holding ≤20°C 50Hz				W	4
DC coil operating					
DC rated control voltage					
			min	V	60
			max	V	130
max				V	130
DC operating voltage					
	pick-up				
			min	%Us	85 Us min
			max	%Us	110 Us max
	drop-out				
			max	%Us	≤70 Us min
Average coil consumption ≤20°C					
			in-rush	W	390
			holding	W	4
Max cycles frequency					
Mechanical operation				cycles/h	1000
Operating times					
Average time for Us control					
	in AC				
		Closing NO			
			min	ms	95
			max	ms	135
		Opening NO			
			min	ms	40
			max	ms	53
UL technical data					
Rated operational voltage AC (UL)				V	600
Yielded mechanical performance					
	for three-phase AC motor				
			200/208V	HP	150
			220/240V	HP	150
			460/480V	HP	350
			575/600V	HP	450
General USE					
	Contactor				
			AC current	A	630
Short-circuit protection fuse, 600V					
	High fault				
			Short circuit current	kA	100
			Fuse rating	A	800
			Fuse class		L
	Standard fault				
			Short circuit current	kA	30
			Fuse rating	A	1000
			Fuse class		L
Ambient conditions					
Temperature					
	Operating temperature				

The characteristics described in this document are subject to updates or modifications at any time. The descriptions, technical and functional information, illustrations and instructions in this brochure are purely illustrative, and are consequently not contractually binding

		min	°C	-40
		max	°C	70
	Storage temperature			
		min	°C	-50
		max	°C	80
Max altitude			m	3000

Resistance & Protection

Pollution degree	3

Dimensions

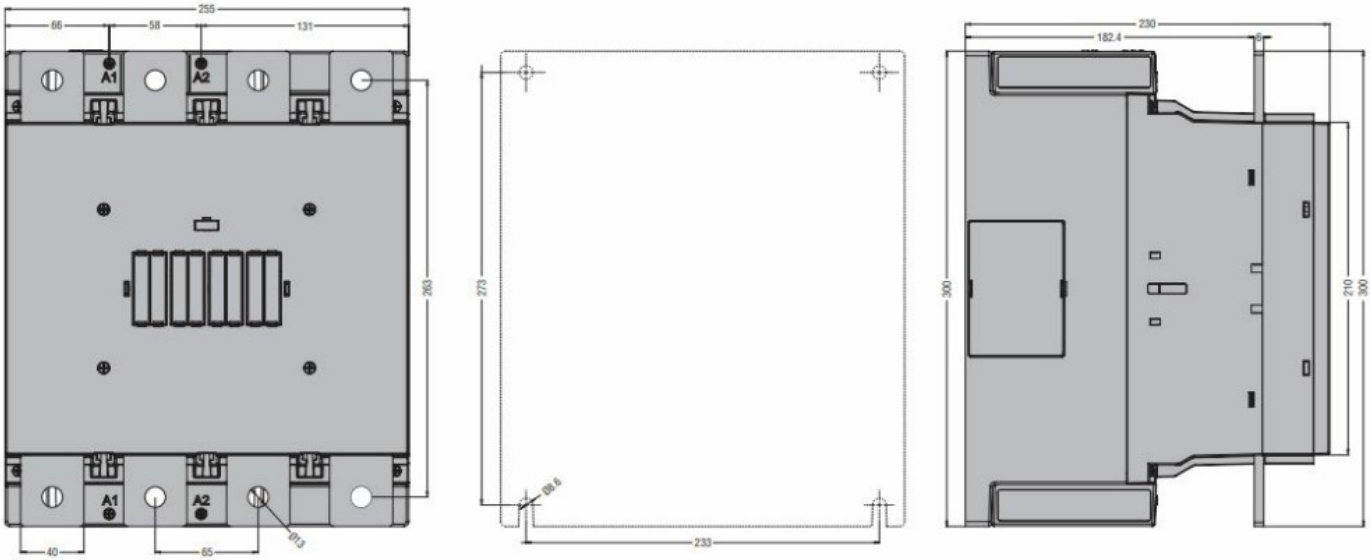

Wiring diagrams

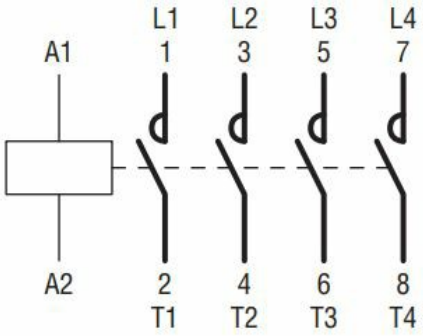

Certifications and compliance

Compliance

CSA C22.2 n° 60947-1
CSA C22.2 n° 60947-4-1
IEC/EN/BS 60947-1
IEC/EN/BS 60947-4-1
UL 60947-1
UL 60947-4-1

Certificates

cULus

ETIM classification

ETIM 8.0	EC000066 - Power contactor, AC switching

The characteristics described in this document are subject to updates or modifications at any time. The descriptions, technical and functional information, illustrations and instructions in this brochure are purely illustrative, and are consequently not contractually binding