ACB1P520A12

POWER DISTRIBUTION BLOCK, SINGLE-POLE, 520A, 12 TERMINALS

Electrical features		
Number of poles		1
Rated insulation voltage Ui	V	1000
IEC Conventional free air thermal current Ith ≤ 40°C	A	520
Conventional free air thermal current Ith UL/CSA	A	520
Rated peak withstand current Ipk	kA	51
Rated short time current Icw 1s	kA	24.5
Short circuit rating (UL)	kA	10
Connections		
Terminal hole diameter_Option 1	mm	Slot 25x9.5mm
Conductor section connectable_Option 1	mm2	flexible busbar 25x9.5mm
Tightening torque Max_Option 1	Nm	10
	Ibin	89
Terminal hole diameter_Option 2	mm	2x9.5mm
Conductor section connectable_Option 2	mm2	6…35
	AWG	14..1
Tightening torque Max_Option 2	Nm	4.4
	Ibin	39
Terminal hole diameter_Option 3	mm	5x7.5mm
Conductor section connectable_Option 3	mm2	2.5…16
	AWG	14...4
Tightening torque Max_Option 3	Nm	2.7
	Ibin	24
Terminal hole diameter_Option 4	mm	4x6mm
Conductor section connectable_Option 4	mm2	2.5...10
	AWG	14...6
Tightening torque Max_Option 4	Nm	2.7
	Ibin	24
Mechanical features		
Operating position	normal	Vertical plane
	allowable	Any
Fixing		Screw / DIN rail 35mm
Metric Allen Key	mm	3-4-5
Weight	g	393

The characteristics described in this document are subject to updates or modifications at any time. The descriptions, technical and functional information, illustrations and instructions in this brochure are purely illustrative, and are consequently not contractually binding

Resistance & Protection

Terminals IP degree	IP20 front

Dimensions

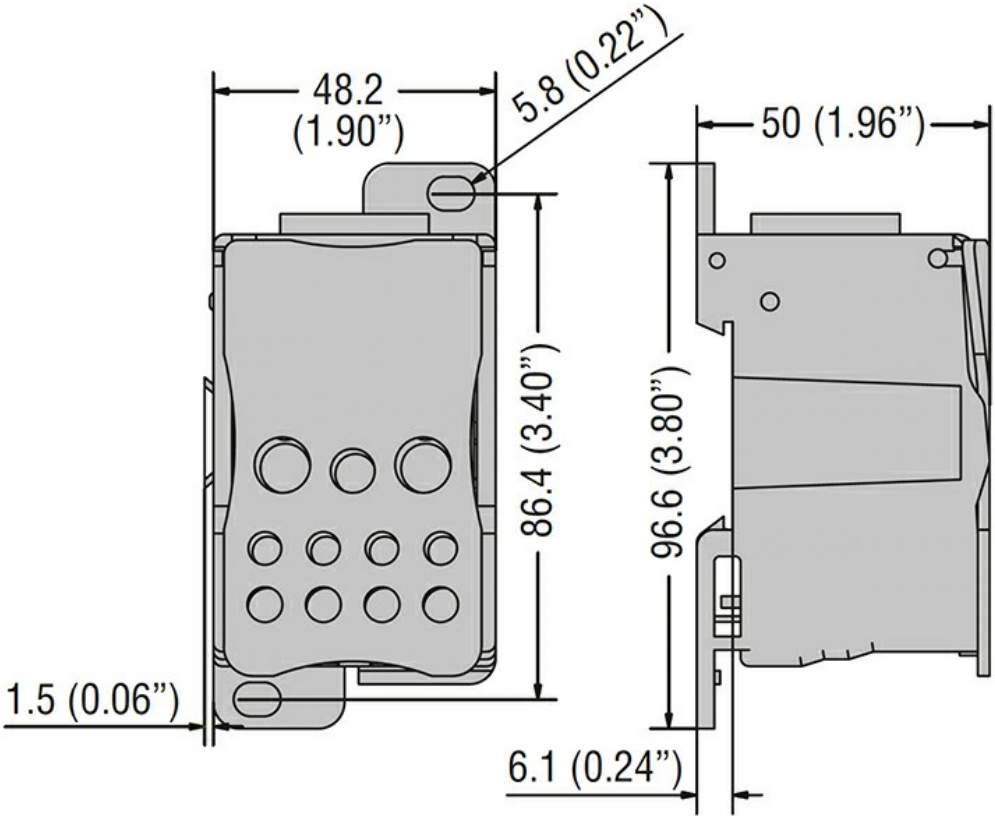

Certifications and compliance

Certifications

IEC/EN/BS 60947-7-1

Compliance

cURus

ETIM classification

EC000066 - Power contactor, AC switching

The characteristics described in this document are subject to updates or modifications at any time. The descriptions, technical and functional information, illustrations and instructions in this brochure are purely illustrative, and are consequently not contractually binding