KMA1L21

LIMIT SWITCH, K SERIES, TOP PUSH ROD PLUNGER, 1 BOTTOM CABLE ENTRY. DIMENSIONS TO EN 50047, METAL BODY, CONTACTS 2NO+1NC SLOW ACTION. METAL PLUNGER



General characteristics

Material			
	Housing		Aluminium-zinc alloy
	Rod		Aluminium-zinc alloy

Contact characteristics

Type of contact			2NO+1NC Slow action
Thermal current Ith		A	10
IEC/EN 60947-5-1 designation			A300 Q300
Rated insulation voltage Ui		V	440
Rated impulse withstand voltage Uimp		kV	4
Insulation class			II
Short-circuit protection with fuse		Class/A	10 gG/SC QUICK FUSE
Switching speed			
	min	m/s	0.5
	max	m/s	1.5
IEC Conventional free air thermal current Ith ≤ 40°C		A	10
Resistance per pole (average value)		mΩ	<10

Mechanical features

Operating head fixing			Locking bayonet insert
Operating torque			
		N	5
		lb	1.1
Tightening torque (Max)			
	Switch fixing		
		Nm	2.5
		lbin	22.1
	Contact terminals		
		Nm	0.8
		lbin	7
	Body lid screw fixing		
		Nm	0.8
		lbin	7
Conductor section			
	AWG/Kcmil		
	min		16
	max		14
	IEC		
	min	mm²	1.5
	max	mm²	2.5
Cable connection			Self-releasing screw terminal

The characteristics described in this document are subject to updates or modifications at any time. The descriptions, technical and functional information, illustrations and instructions in this brochure are purely illustrative, and are consequently not contractually binding

Cable entry			M20 on the bottom
Operations			
Mechanical life		cycles	<10000000
Mechanical operation		cycles/h	3600
Ambient conditions			
Temperature			
	Operating temperature		
	min	°C	-25
	max	°C	+70
	Storage temperature		
	min	°C	-40
	max	°C	+70
Resistance & Protection			
IP degree			
	Terminals		IP20
	Body housing		IP65
Pollution degree			3

Dimensions

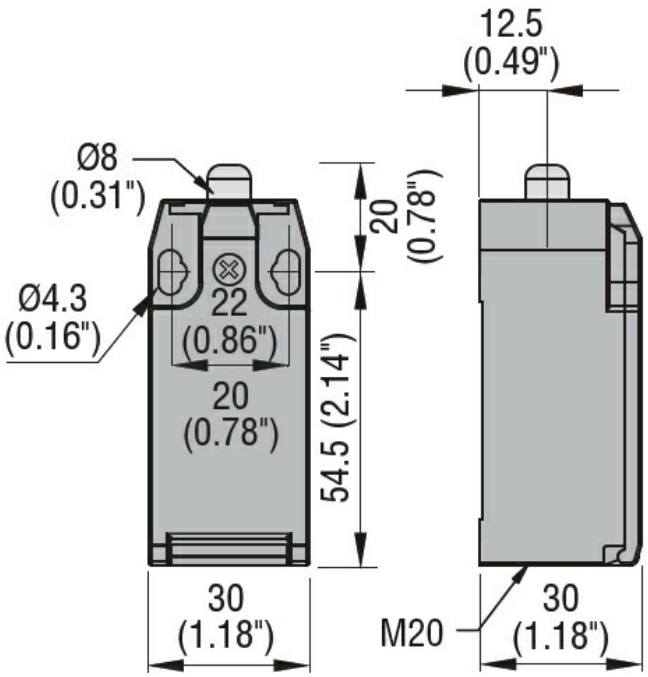

Wiring diagrams

The characteristics described in this document are subject to updates or modifications at any time. The descriptions, technical and functional information, illustrations and instructions in this brochure are purely illustrative, and are consequently not contractually binding

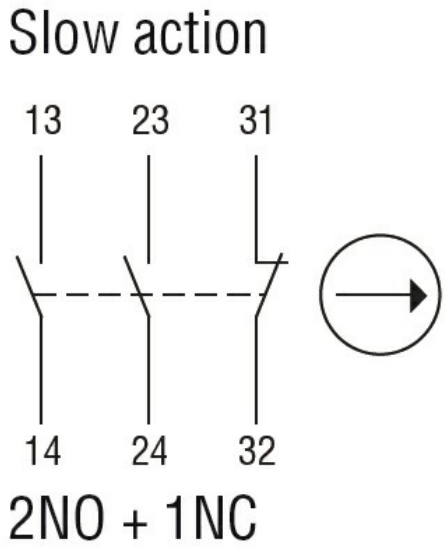

Certifications and compliance

Compliance

CSA C22.2 n° 14
EN 50047
IEC/EN 60204-1
IEC/EN 60947-1
IEC/EN 60947-5-1
UL508

Certificates

CCC
cULus
EAC

ETIM classification

ETIM 8.0	EC000030 - End switch

The characteristics described in this document are subject to updates or modifications at any time. The descriptions, technical and functional information, illustrations and instructions in this brochure are purely illustrative, and are consequently not contractually binding