HS2C6HV015A230

SOLID STATE RELAY COMPLETE WITH HEATSINK, THREE-PHASE (2 CONTROLLED), 15A, 90...280VAC, SCREW TERMINALS



Input characteristics			
Control voltage			90...280VAC
Operating voltage limits			
	Operating voltage pick-up	V	90
	Operating voltage drop-out	V	20
Input current at min…max voltage		mA	23...50
Operating times			
Switching-on			Half cycle max
Switching-off			Half cycle max
Output characteristics			
Static output type			SCR (silicon controlled rectifier)
Switching mode			Zero crossing
Rated operating voltage		VAC	48…600
Blocking voltage		V	1200
Operational frequency (min…max)		Hz	45...65
Rated operating current AC-51 (resistive load) at 40°C		A	15
Rated operating current AC-51 (resistive load) at 55°C		A	12
Rated operating current AC-53 (motor load) at 40°C		A	7
Operational current min		A	0.16
Non repetitive surge peak on state current t=10ms		A	530
Off state leakage current		mA	1
On state output voltage drop		V	1.2
Critical rate of rise of off-state voltage dv/dt		V/µs	1000
Input - Output isolation		V	5000
Input - Output to metal base		V	5000
Output protection type			VDR
I2t		A2s	1404
Terminal characteristics			
Control terminals		Type	Screw
Terminals tool			Blade 3.5mm
Tightening torque control terminals			
		Nm	0.5Nm
		lbin	4.5
Conductor section connectable (control terminals) with 1 or 2 wires min…max			
	AWG stranded	n°	28…12
	Flexible w/o lug	mm2	0.75…2.5
	Flexible c/w insulated spade lug	mm2	0.75…2.5
Load terminals		Type	Screw
Load terminals tool			PH2
Tightening torque load terminals			
		Nm	1.5
		lbin	13.3
Conductor section connectable (load terminals) with 1 or 2 wires min…max			

The characteristics described in this document are subject to updates or modifications at any time. The descriptions, technical and functional information, illustrations and instructions in this brochure are purely illustrative, and are consequently not contractually binding

	AWG stranded	n°	18…10
	Flexible w/o lug	mm2	1…6
	Flexible c/w insulated spade lug	mm2	1…16
Operating position			
	allowable		On vertical plane
Fixing			Screw or on 35mm DIN rail

Ambient conditions

Temperature				
	Operating temperature			
		min	°C	-40
		max	°C	+80
	Storage temperature			
		min	°C	-40
		max	°C	+130

Dimensions

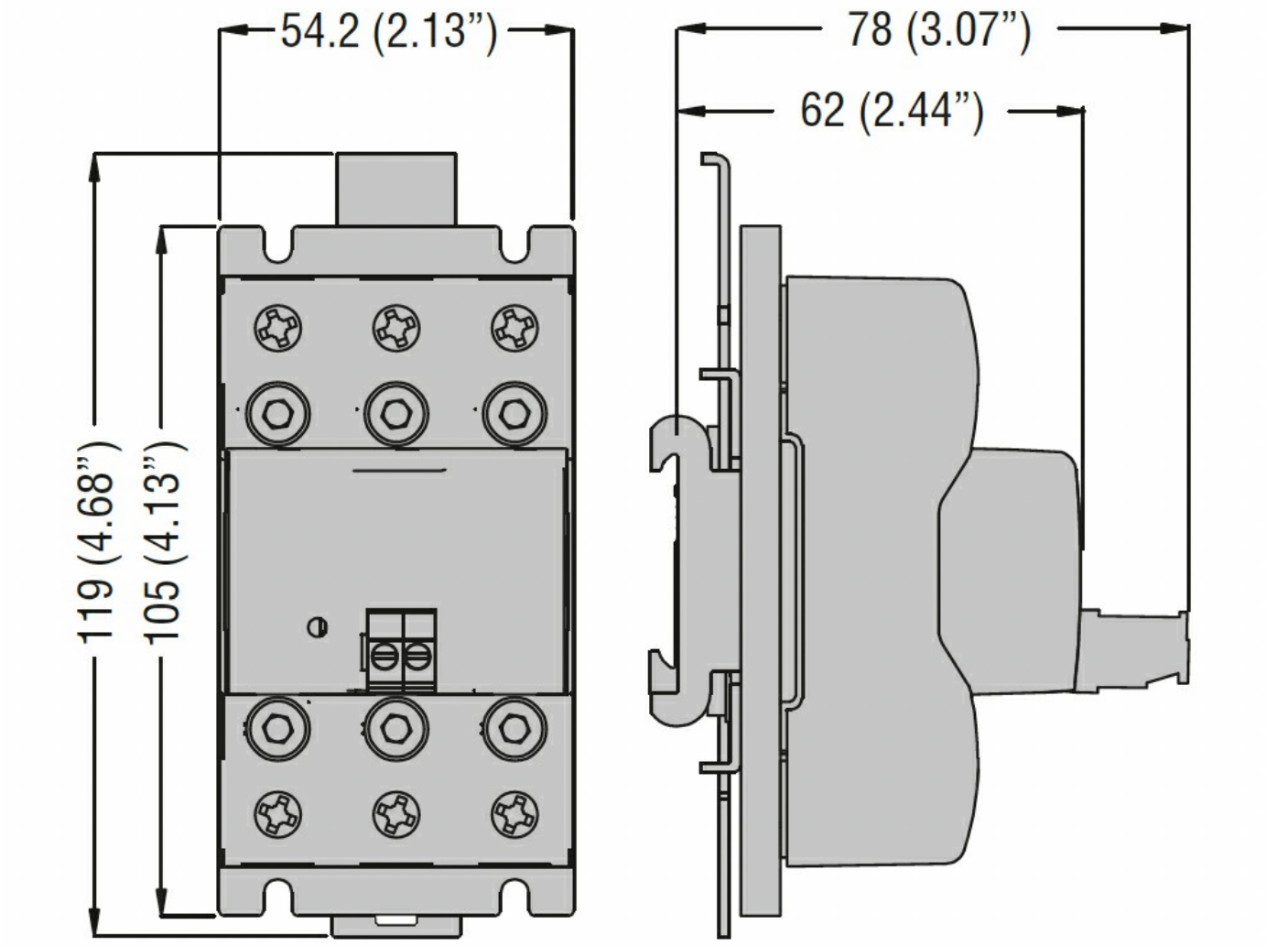

Wiring diagrams

The characteristics described in this document are subject to updates or modifications at any time. The descriptions, technical and functional information, illustrations and instructions in this brochure are purely illustrative, and are consequently not contractually binding

HS2C6HV015A230

SOLID STATE RELAY COMPLETE WITH HEATSINK, THREE-PHASE (2 CONTROLLED), 15A, 90...280VAC, SCREW TERMINALS

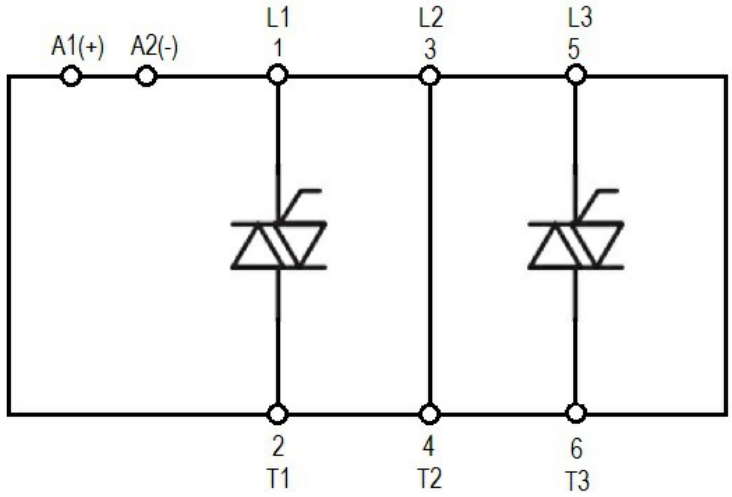

Certifications and compliance

Certifications

IEC/EN/BS 60335-1
IEC/EN/BS 60947-4-2
IEC/EN/BS 60947-4-3
IEC/EN/BS 62314

Compliance

cULus

ETIM classification

EC000066 - Power contactor, AC switching

The characteristics described in this document are subject to updates or modifications at any time. The descriptions, technical and functional information, illustrations and instructions in this brochure are purely illustrative, and are consequently not contractually binding