# Gomito

| CRI 90
**CZ152DBBWDI**

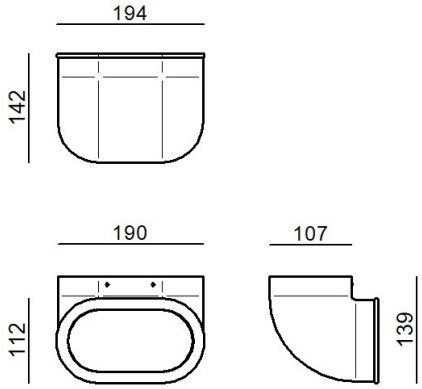


| Technische Daten | |
|---|---|
| Designer | Gae Aulenti |
| Jahr der Verwirklichung | 2026 |
| Typ | Wandleuchten |
| Installationsposition | Wand |
| Installationsumgebung | Indoor |
| Lichtquelle | LED |
| Circuit structure | topLED |
| Optik | Diffuses |
| Light emission direction | upward |
| Lampe Nennleistung | 25 W DC |
| Gesamtleistung | 26 W |
| Lichtstrom (Lichtquelle) | 3464 lm |
| Nominale Eingangsspannung | 220 - 240 V AC |
| Eingangsspannungsbereich | 198 - 264 V AC |
| Frequency | 50 - 60 Hz |
| Ähnlichste Farbtemperatur / Tone | 3000 K |
| Farbwiedergabeindex | 90 Ra |
| Gleichstrom/Gleichspannung | AC |
| Isolierklasse | 1 |
| IP | IP20 |
| Glühdrahtprüfung | 850° |
| Direkte Montage auf normal entflammbaren Oberflächen | Ja |
| CE | Ja |
| Einschließlich Driver | Driver |
| Leuchte dimmbar | Phase cut |
| Schwenkbarkeit | Nein |
| Drehbarkeit | Nein |
| Begehbarkeit | Nein |
| Überrollbarkeit | Nein |
| Einschließlich Kabel | Nein |
| Harzbeschichtung | Nein |
| Typ Lichtabstrahlung | Einflammig |
| Schutz vor elektrostatischen Entladungen | Nein |
| Schutz vor Stoßspannungen | Nein |

| Oberfläche Oberfläche Gehäuse | |
|---|---|
| Material | Aluminium |
| Farbe | Text black (R9005) |
| Bearbeitungstyp | Lackierung |

| Oberfläche Oberfläche diffusor | |
|---|---|
| Material | PC |
| Bearbeitungstyp | Satinieren |

| Oberfläche Oberfläche fassung | |
|---|---|
| Material | Aluminium |
| Farbe | Text black (R9005) |
| Bearbeitungstyp | Lackierung |



Linea Light Group reserves the right, without any advance notice, to change the characteristics of their products, as well as the availability of the same at any time. No product, relative technical data, illustrations and information are binding for Linea Light Group. Linea Light Group will not be held liable for any illustration, text and/or translation\ errors. All values indicated are measured values. There is a +/- 10% tolerance for the flow, CCT and power data.

| CRI 90
**CZ152DBBWDI**

Single emission wall lights for indoor application. The warm white LED light source with a diffused light distribution is composed of 60 topled LEDs with CCT of 3000 K and a CRI 90; the source luminous flux is 3464 lm, with a 138.6 lm/W nominal luminous efficacy.

The device body is made of aluminium and features a text black (r9005) finish, processed by means of coating; the diffuser is made of PC with a satin finishing treatment; the mounting frame is made of aluminium, with a text black (r9005) finish, processed by means of coating.

The ingress protection degree is IP20;

The total absorbed power is 26 W

The device features protection class I and can be wall lights-mounted.

Compliant with the EN 60598-1 standard and its specific provisions.

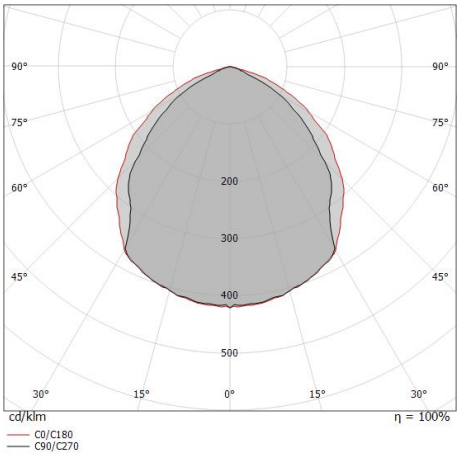


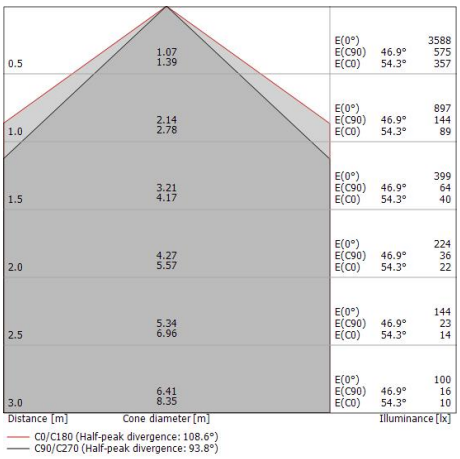


| **Energieeffizienzklasse** |
|---|
| Dieses Produkt enthält eine Lichtquelle der Energieeffizienzklasse E. |

| **Illuminotechnical Eigenschaften** | |
|---|---|
| Light Output Ratio (LOR) | 61 % |
| Lichtstrom (Lichtquelle) | 3464 lm |
| Leuchten Lichtstrom | 2133 lm |
| Consumption | 26 W |
| Leuchten Lichtausbeute | 82 lm/W |
| Farbtemperatur | 3000 K |
| Standard Deviation of Colour Matching | 3 Step MacAdam |
| Farbwiedergabeindex | 90 Ra |
| Verbindungstemperatur (Leuchte) | 80 |
| Standardumgebungstemperatur | 25°C |

| **LED Life / Failure Ratio** |
|---|
| L70 B10 C0 102000h (at Tj 115  Ta 25 ) |
| L90 B10 C0 55000h |

| **UGR** | |
|---|---|
| UGR axial | 23.7 |
| UGR transversal | 26.3 |
| X=4H \| Y=8H | S=0.25H |
| Reflection factor | 70/50/20 |

| **OPTICAL** | |
|---|---|
| Optik C90/C270 | 94° |
| Optik C0/C180 | 109° |
| Light distribution simmetry | Symmetrical 2 assis |



Linea Light Group reserves the right, without any advance notice, to change the characteristics of their products, as well as the availability of the same at any time. No product, relative technical data, illustrations and information are binding for Linea Light Group. Linea Light Group will not be held liable for any illustration, text and/or translation\ errors. All values indicated are measured values. There is a +/- 10% tolerance for the flow, CCT and power data.

Gomito | Wall Lights | Accessories

**CZ152DBBWDI**

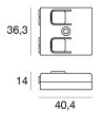


Dimmer - Phasenabschnitt, CASAMBI - Unverzichtbar zum Dimmen der Lampe mit Casambi Radio-frequenza, 85-240V

**Code**

KIT0080

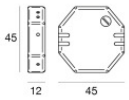


Dimmer - Phasenabschnitt (max. 100 W) – wichtig zum Dimmen der Lampe 220-240V

**Code**

KIT0026



Linea Light Group reserves the right, without any advance notice, to change the characteristics of their products, as well as the availability of the same at any time. No product, relative technical data, illustrations and information are binding for Linea Light Group. Linea Light Group will not be held liable for any illustration, text and/or translation\ errors. All values indicated are measured values. There is a +/- 10% tolerance for the flow, CCT and power data.