# Torino

Wandleuchten | 220-240 V
32 topLED 7 W DC - 8 W AC | CRI 90
**CZ151IWHMDI**

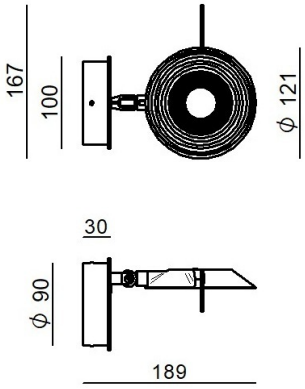


| Technische Daten | |
|---|---|
| Designer | Shigeaki Asahara |
| Jahr der Verwirklichung | 2026 |
| Typ | Wandleuchten |
| Installationsposition | Wand |
| Installationsumgebung | Indoor |
| Lichtquelle | LED |
| Circuit structure | topLED |
| Optik | Diffuses |
| Light emission direction | downward |
| Lampe Nennleistung | 7 W DC |
| Gesamtleistung | 8 W |
| Lichtstrom (Lichtquelle) | 947 lm |
| Nominale Eingangsspannung | 220 - 240 V AC |
| Eingangsspannungsbereich | 220 - 240 V AC |
| Frequency | 50 - 60 Hz |
| Ähnlichste Farbtemperatur / Tone | 2700 K |
| Farbwiedergabeindex | 90 Ra |
| Gleichstrom/Gleichspannung | AC |
| Isolierklasse | 1 |
| IP | IP20 |
| Glühdrahtprüfung | 850° |
| Direkte Montage auf normal entflammbaren Oberflächen | Ja |
| CE | Ja |
| Einschließlich Driver | Driver |
| Leuchte dimmbar | Touch |
| Schwenkbarkeit | Orientabile |
| Gesamtwinkel (vertikale Ebene) | 0 ° |
| Gesamtwinkel (horizontale Ebene) | 320 ° |
| Drehbarkeit | Ja |
| Gesamtwinkel (horizontale Ebene) | 0 ° |
| Gesamtwinkel (vertikale Ebene) | 220 ° |
| Begehbarkeit | Nein |
| Überrollbarkeit | Nein |
| Einschließlich Kabel | Nein |
| Harzbeschichtung | Nein |
| Typ Lichtabstrahlung | Einflammig |
| Schutz vor elektrostatischen Entladungen | Nein |
| Schutz vor Stoßspannungen | Nein |

| Oberfläche Oberfläche Gehäuse | |
|---|---|
| Material | Aluminium |
| Farbe | Text white (R9003) |
| Bearbeitungstyp | Lackierung |

| Oberfläche Oberfläche diffusor | |
|---|---|
| Material | PC |
| Farbe | Opal |

| Oberfläche Oberfläche fassung | |
|---|---|
| Material | Aluminium |
| Farbe | Text white (R9003) |
| Bearbeitungstyp | Lackierung |



Linea Light Group reserves the right, without any advance notice, to change the characteristics of their products, as well as the availability of the same at any time. No product, relative technical data, illustrations and information are binding for Linea Light Group. Linea Light Group will not be held liable for any illustration, text and/or translation\ errors. All values indicated are measured values. There is a +/- 10% tolerance for the flow, CCT and power data.

Wandleuchten | 220-240 V | 32 topLED 7 W DC - 8 W AC | CRI 90
**CZ151IWHMDI**

Single emission wall lights for indoor application. The super warm white LED light source with a diffused light distribution is composed of 32 topled LEDs with CCT of 2700 K and a CRI 90; the source luminous flux is 947 lm, with a 135.3 lm/W nominal luminous efficacy.

The device body is made of aluminium and features a text white (r9003) finish, processed by means of coating; the diffuser is made of PC; the mounting frame is made of aluminium, with a text white (r9003) finish, processed by means of coating.

The ingress protection degree is IP20;

The total absorbed power is 8 W

The device features protection class I and can be wall lights-mounted.

Compliant with the EN 60598-1 standard and its specific provisions.

| **Energieeffizienzklasse** |
|---|
| Dieses Produkt enthält eine Lichtquelle der Energieeffizienzklasse E. |

| **Illuminotechnical Eigenschaften** | |
|---|---|
| Light Output Ratio (LOR) | 78 % |
| Lichtstrom (Lichtquelle) | 947 lm |
| Leuchten Lichtstrom | 744 lm |
| Consumption | 8 W |
| Leuchten Lichtausbeute | 93 lm/W |
| Farbtemperatur | 2700 K |
| Standard Deviation of Colour Matching | 3 Step MacAdam |
| Farbwiedergabeindex | 90 Ra |
| Verbindungstemperatur (Leuchte) | 80 |
| Standardumgebungstemperatur | 25°C |

| **LED Life / Failure Ratio** |
|---|
| L70 B10 C0 102000h (at Tj 115 Ta 25 ) |
| L90 B10 C0 55000h |

| **UGR** | |
|---|---|
| UGR axial | 27.8 |
| UGR transversal | 28.1 |
| X=4H \| Y=8H | S=0.25H |
| Reflection factor | 70/50/20 |

| **OPTICAL** | |
|---|---|
| Optik C0/C180 | 114° |
| Light distribution simmetry | Symmetrical |

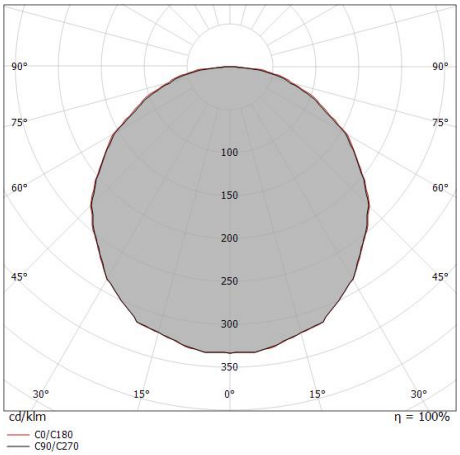


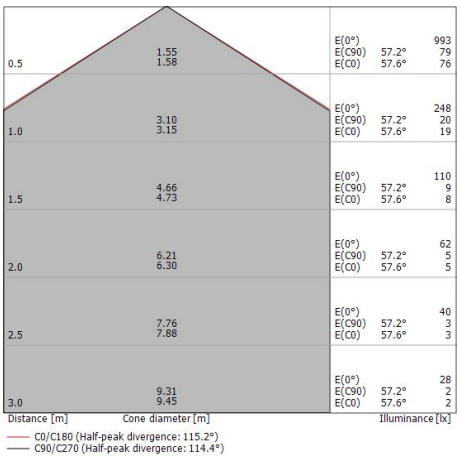




Linea Light Group reserves the right, without any advance notice, to change the characteristics of their products, as well as the availability of the same at any time. No product, relative technical data, illustrations and information are binding for Linea Light Group. Linea Light Group will not be held liable for any illustration, text and/or translation\ errors. All values indicated are measured values. There is a +/- 10% tolerance for the flow, CCT and power data.