Torino

| CRI 90
CZ151IMGWDI

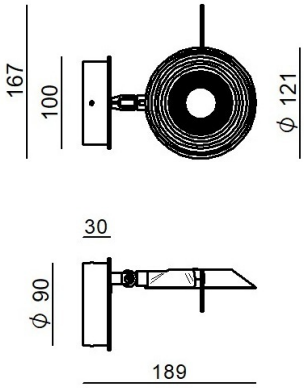

Technische Daten	
Designer	Shigeaki Asahara
Jahr der Verwirklichung	2026
Typ	Wandleuchten
Installationsposition	Wand
Installationsumgebung	Indoor
Lichtquelle	LED
Circuit structure	topLED
Optik	Diffuses
Light emission direction	downward
Lampe Nennleistung	7 W DC
Gesamtleistung	8 W
Lichtstrom (Lichtquelle)	1013 lm
Nominale Eingangsspannung	220 - 240 V AC
Eingangsspannungsbereich	220 - 240 V AC
Frequency	50 - 60 Hz
Ähnlichste Farbtemperatur / Tone	3000 K
Farbwiedergabeindex	90 Ra
Gleichstrom/Gleichspannung	AC
Isolierklasse	1
IP	IP20
Glühdrahtprüfung	850°
Direkte Montage auf normal entflammbaren Oberflächen	Ja
CE	Ja
Einschließlich Driver	Driver
Leuchte dimmbar	Touch
Schwenkbarkeit	Orientabile
Gesamtwinkel (vertikale Ebene)	0 °
Gesamtwinkel (horizontale Ebene)	320 °
Drehbarkeit	Ja
Gesamtwinkel (horizontale Ebene)	0 °
Gesamtwinkel (vertikale Ebene)	220 °
Begehbarkeit	Nein
Überrollbarkeit	Nein
Einschließlich Kabel	Nein
Harzbeschichtung	Nein
Typ Lichtabstrahlung	Einflammig
Schutz vor elektrostatischen Entladungen	Nein
Schutz vor Stoßspannungen	Nein

Oberfläche Oberfläche Gehäuse	
Material	Aluminium
Farbe	Text grey (R7012)
Bearbeitungstyp	Lackierung

Oberfläche Oberfläche diffusor	
Material	PC
Farbe	Opal

Oberfläche Oberfläche fassung	
Material	Aluminium
Farbe	Text grey (R7012)
Bearbeitungstyp	Lackierung

Linea Light Group reserves the right, without any advance notice, to change the characteristics of their products, as well as the availability of the same at any time. No product, relative technical data, illustrations and information are binding for Linea Light Group. Linea Light Group will not be held liable for any illustration, text and/or translation\ errors. All values indicated are measured values. There is a +/- 10% tolerance for the flow, CCT and power data.

| CRI 90
CZ151IMGWDI

Single emission wall lights for indoor application. The warm white LED light source with a diffused light distribution is composed of 32 topled LEDs with CCT of 3000 K and a CRI 90; the source luminous flux is 1013 lm, with a 144.7 lm/W nominal luminous efficacy.

The device body is made of aluminium and features a text grey (r7012) finish, processed by means of coating; the diffuser is made of PC; the mounting frame is made of aluminium, with a text grey (r7012) finish, processed by means of coating.

The ingress protection degree is IP20;

The total absorbed power is 8 W

The device features protection class I and can be wall lights-mounted.

Compliant with the EN 60598-1 standard and its specific provisions.

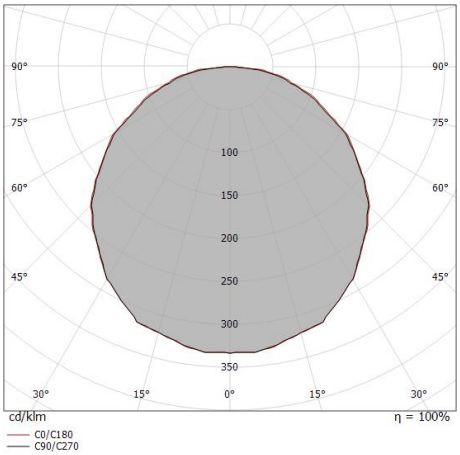

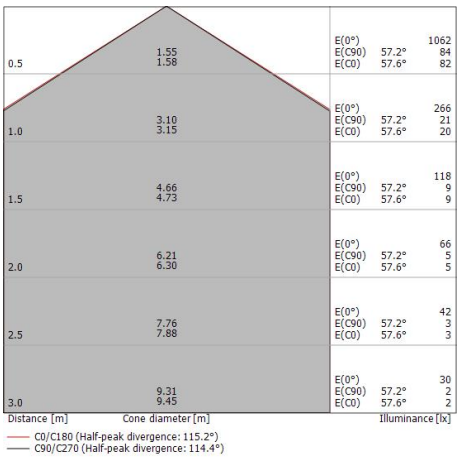

Energieeffizienzklasse
Dieses Produkt enthält eine Lichtquelle der Energieeffizienzklasse E.

Illuminotechnical Eigenschaften	
Light Output Ratio (LOR)	78 %
Lichtstrom (Lichtquelle)	1013 lm
Leuchten Lichtstrom	796 lm
Consumption	8 W
Leuchten Lichtausbeute	99 lm/W
Farbtemperatur	3000 K
Standard Deviation of Colour Matching	3 Step MacAdam
Farbwiedergabeindex	90 Ra
Verbindungstemperatur (Leuchte)	80
Standardumgebungstemperatur	25°C

LED Life / Failure Ratio
L70 B10 C0 102000h (at Tj 115 Ta 25)
L90 B10 C0 55000h

UGR	
UGR axial	28
UGR transversal	28.3
X=4H | Y=8H	S=0.25H
Reflection factor	70/50/20

OPTICAL	
Optik C0/C180	114°
Light distribution simmetry	Symmetrical

Linea Light Group reserves the right, without any advance notice, to change the characteristics of their products, as well as the availability of the same at any time. No product, relative technical data, illustrations and information are binding for Linea Light Group. Linea Light Group will not be held liable for any illustration, text and/or translation\ errors. All values indicated are measured values. There is a +/- 10% tolerance for the flow, CCT and power data.