Bascula

Pendelleuchte | 220-240 V
120 topLED 25 W DC - 26 W AC | CRI 90
CZ001CKGWDD

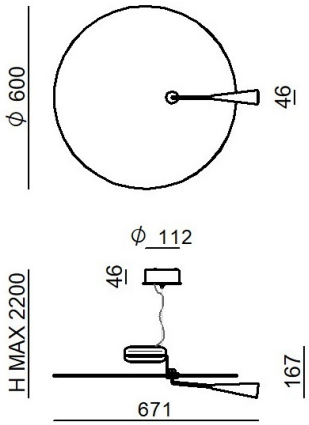

Technische Daten	
Designer	Shigeaki Asahara
Jahr der Verwirklichung	1985
Typ	Pendelleuchte
Installationsposition	Decke
Installationsumgebung	Indoor
Lichtquelle	LED
Circuit structure	topLED
Optik	Diffuses
Light emission direction	downward and upward
Lampe Nennleistung	25 W DC
Gesamtleistung	26 W
Lichtstrom (Lichtquelle)	3635 lm
Nominale Eingangsspannung	220 - 240 V AC
Eingangsspannungsbereich	220 - 240 V AC
Frequency	50 - 60 Hz
Ähnlichste Farbtemperatur / Tone	3000 K
Farbwiedergabeindex	90 Ra
Gleichstrom/Gleichspannung	AC
Isolierklasse	1
IP	IP20
Glühdrahtprüfung	650°
Direkte Montage auf normal entflammbaren Oberflächen	Ja
CE	Ja
Einschließlich Driver	Driver
Leuchte dimmbar	DALI-2 - PUSH DIM
Schwenkbarkeit	Orientabile
Gesamtwinkel (horizontale Ebene)	360 °
Drehbarkeit	Nein
Begehbarkeit	Nein
Überrollbarkeit	Nein
Einschließlich Kabel	Ja
Kabellänge	2 m
Harzbeschichtung	Nein
Typ Lichtabstrahlung	Zweiflammig
Nettogewicht	5.55 Kg
Schutz vor elektrostatischen Entladungen	Nein
Schutz vor Stoßspannungen	Nein

Oberfläche Oberfläche Gehäuse	
Material	Eisen - Aluminium
Farbe	Brushed nickel - Text grey (R7012)
Bearbeitungstyp	Tampongalvanisieren - Lackierung

Oberfläche Oberfläche diffusor	
Material	Glas
Farbe	Transparent
Bearbeitungstyp	Siebdruck

Oberfläche Oberfläche fassung	
Material	Eisen
Farbe	Text grey (R7012)
Bearbeitungstyp	Lackierung

Cables Pendelleuchte	
Max. Kabellänge	2000 mm

Linea Light Group reserves the right, without any advance notice, to change the characteristics of their products, as well as the availability of the same at any time. No product, relative technical data, illustrations and information are binding for Linea Light Group. Linea Light Group will not be held liable for any illustration, text and/or translation\ errors. All values indicated are measured values. There is a +/- 10% tolerance for the flow, CCT and power data.

Pendelleuchte | 220-240 V | 120 topLED 25 W DC - 26 W AC | CRI 90
CZ001CKGWDD

Double emission pendant luminaires for indoor application. The warm white LED light source with a diffused light distribution is composed of 120 topled LEDs with CCT of 3000 K and a CRI 90; the source luminous flux is 3635 lm, with a 145.4 lm/W nominal luminous efficacy.

The device body is made of iron and features a brushed nickel finish, processed by means of electroplating The device body is made of aluminium and features a text grey (r7012) finish, processed by means of coating; the diffuser is made of glass with a silk-screening treatment; the mounting frame is made of iron, with a text grey (r7012) finish, processed by means of coating.

The ingress protection degree is IP20; the total weight is of 5.55 kg.

The total absorbed power is 26 W The power supply cable is included and features a 2 m length.

The device features protection class I and can be ceiling-mounted.

Compliant with the EN 60598-1 standard and its specific provisions.

Energieeffizienzklasse
Dieses Produkt enthält eine Lichtquelle der Energieeffizienzklasse E.

Illuminotechnical Eigenschaften	
Light Output Ratio (LOR)	72 %
Lichtstrom (Lichtquelle)	3635 lm
Leuchten Lichtstrom	2650 lm
Consumption	26 W
Leuchten Lichtausbeute	101 lm/W
Farbtemperatur	3000 K
Standard Deviation of Colour Matching	3 Step MacAdam
Farbwiedergabeindex	90 Ra
Verbindungstemperatur (Leuchte)	80
Standardumgebungstemperatur	25°C

LED Life / Failure Ratio
L70 B10 C0 102000h (at Tj 115 Ta 25)
L90 B10 C0 55000h

UGR	
UGR axial	17
UGR transversal	16.9
X=4H | Y=8H	S=0.25H
Reflection factor	70/50/20

OPTICAL	
Optik C0/C180	115°
Light distribution simmetry	Symmetrical

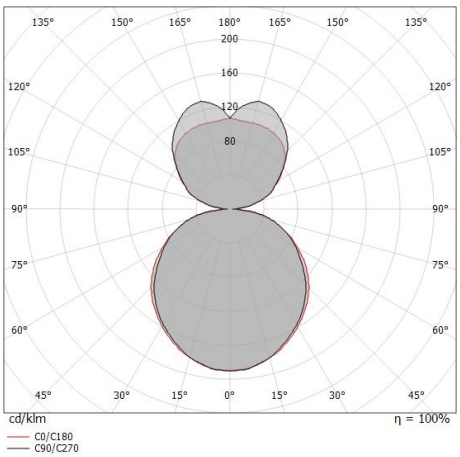

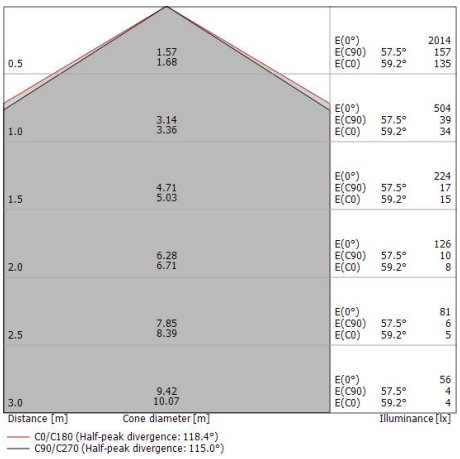

Linea Light Group reserves the right, without any advance notice, to change the characteristics of their products, as well as the availability of the same at any time. No product, relative technical data, illustrations and information are binding for Linea Light Group. Linea Light Group will not be held liable for any illustration, text and/or translation\ errors. All values indicated are measured values. There is a +/- 10% tolerance for the flow, CCT and power data.

Bascula | Pendant Luminaires | Accessories

CZ001CKGWDD

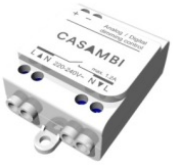

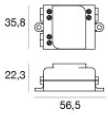

Dimmer - 0-10V, 1-10V oder DALI-Dimmschnittstelle

Bluetooth, 220-240V

Code

KIT0079

Linea Light Group reserves the right, without any advance notice, to change the characteristics of their products, as well as the availability of the same at any time. No product, relative technical data, illustrations and information are binding for Linea Light Group. Linea Light Group will not be held liable for any illustration, text and/or translation\ errors. All values indicated are measured values. There is a +/- 10% tolerance for the flow, CCT and power data.