Misty

Wandleuchten - Deckenleuchten | 220-240 V
192 topLED 15 W DC - 18 W AC | CRI 90
CA137CBBWDI





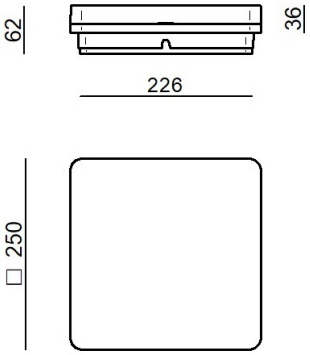

Technische Daten	
Typ	Wandleuchten - Deckenleuchten
Installationsposition	Wand - Decke
Installationsumgebung	Outdoor
Lichtquelle	LED
Circuit structure	topLED
Optik	Diffuses
Light emission direction	downward
Lampe Nennleistung	15 W DC
Gesamtleistung	18 W
Lichtstrom (Lichtquelle)	1923 lm
Nominale Eingangsspannung	220 - 240 V AC
Eingangsspannungsbereich	220 - 240 V AC
Frequency	50 - 60 Hz
Ähnlichste Farbtemperatur / Tone	3000 K
Farbwiedergabeindex	90 Ra
Gleichstrom/Gleichspannung	AC
Isolierklasse	2
IP	IP65
Glühdrahtprüfung	850°
Direkte Montage auf normal entflammbaren Oberflächen	Ja
CE	Ja
Einschließlich Driver	Driver
Leuchte dimmbar	DALI-Push
Schwenkbarkeit	Nein
Drehbarkeit	Nein
Begehbarkeit	Nein
Überrollbarkeit	Nein
Einschließlich Kabel	Nein
Harzbeschichtung	Nein
Typ Lichtabstrahlung	Einflammig
Nettogewicht	0.786 Kg
Schutz vor elektrostatischen Entladungen	Nein
Schutz vor Stoßspannungen	Nein

Oberfläche Oberfläche Gehäuse	
Material	PC
Farbe	Schwarz RAL 9005
Bearbeitungstyp	Lackierung

Oberfläche Oberfläche diffusor	
Material	PC
Farbe	Opal

Linea Light Group reserves the right, without any advance notice, to change the characteristics of their products, as well as the availability of the same at any time. No product, relative technical data, illustrations and information are binding for Linea Light Group. Linea Light Group will not be held liable for any illustration, text and/or translation\ errors. All values indicated are measured values. There is a +/- 10% tolerance for the flow, CCT and power data.

Wandleuchten - Deckenleuchten | 220-240 V | 192 topLED 15 W DC - 18 W AC | CRI 90
CA137CBBWDI

Single emission wall lights or ceiling downlights for outdoor application. The warm white LED light source with a diffused light distribution is composed of 192 topled LEDs with CCT of 3000 K and a CRI 90; the source luminous flux is 1923 lm, with a 128.2 lm/W nominal luminous efficacy.

The device body is made of PC and features a black ral 9005 finish, processed by means of coating; the diffuser is made of PC.

The ingress protection degree is IP65; the total weight is of 0.786 kg.

The total absorbed power is 18 W

The device features protection class II and can be wall lights or ceiling-mounted.

Compliant with the EN 60598-1 standard and its specific provisions.

Illuminotechnical Eigenschaften	
Light Output Ratio (LOR)	87 %
Lichtstrom (Lichtquelle)	1923 lm
Leuchten Lichtstrom	1690 lm
Consumption	18 W
Leuchten Lichtausbeute	93 lm/W
Farbtemperatur	3000 K
Standard Deviation of Colour Matching	3 Step MacAdam
Farbwiedergabeindex	90 Ra
Verbindungstemperatur (Leuchte)	80
Standardumgebungstemperatur	25°C

LED Life / Failure Ratio
L70 B20 C0 72500h

UGR	
UGR axial	23.9
UGR transversal	23.9
X=4H | Y=8H	S=0.25H
Reflection factor	70/50/20

OPTICAL	
Optik C0/C180	113°
Light distribution simmetry	Symmetrical

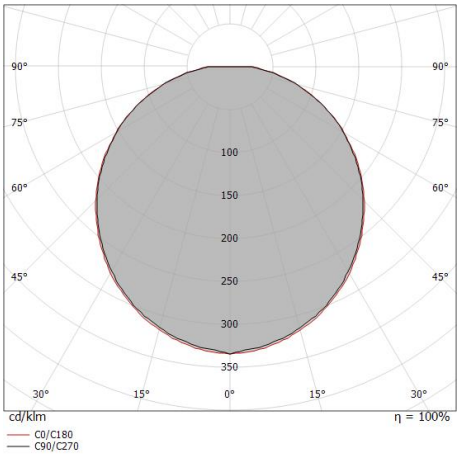

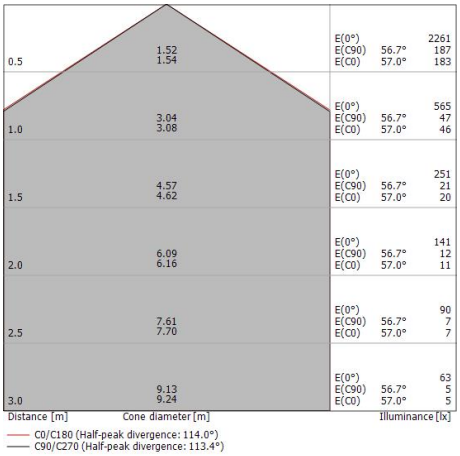

Linea Light Group reserves the right, without any advance notice, to change the characteristics of their products, as well as the availability of the same at any time. No product, relative technical data, illustrations and information are binding for Linea Light Group. Linea Light Group will not be held liable for any illustration, text and/or translation\ errors. All values indicated are measured values. There is a +/- 10% tolerance for the flow, CCT and power data.