Buzzer_Q

Poller & Mastaufsatzleuchten
198-264 V AC /180-280 V DC | 18 topLED 5 W DC - 7 W AC | CRI 80
C01675BGWSR

MARINE GRADE

BUG Rating 0

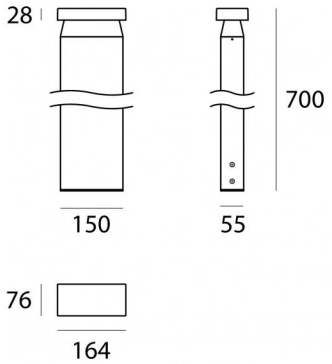

Technische Daten	
Typ	Poller
Installationsposition	Boden
Installationsumgebung	Outdoor
Lichtquelle	LED
Circuit structure	topLED
Optik	Asymmetric 180°
Light emission direction	downward
Lampe Nennleistung	5 W DC
Gesamtleistung	7 W
Lichtstrom (Lichtquelle)	905 lm
Nominale Eingangsspannung	220 - 240 V AC
Eingangsspannungsbereich	198 - 264 V AC
Frequency	50 - 60 Hz
Ähnlichste Farbtemperatur / Tone	3000 K
Farbwiedergabeindex	80 Ra
Gleichstrom/Gleichspannung	AC
Isolierklasse	2
IP	IP65
IK	IK10
Glühdrahtprüfung	850°
Direkte Montage auf normal entflammbaren Oberflächen	Ja
CE	Ja
Einschließlich Driver	Driver
Leuchte dimmbar	DALI-2 - PUSH DIM
Schwenkbarkeit	Nein
Drehbarkeit	Nein
Begehbarkeit	Nein
Überrollbarkeit	Nein
Einschließlich Kabel	Ja
Kabellänge	0.2 m
Harzbeschichtung	Ja
Typ Lichtabstrahlung	Einflammig
Nettogewicht	2.8 Kg
Schutz vor elektrostatischen Entladungen	Ja
Schutz vor Stoßspannungen	2 KV

Oberfläche Oberfläche Gehäuse	
Material	Stranggepresstes Aluminium EN AB - 46100
Farbe	Schwarzgrau RAL7021
Bearbeitungstyp	Offenporige Anodisierung + Pulverlackierung

Oberfläche Oberfläche diffusor	
Farbe	Black

Oberfläche Oberfläche sockel	
Material	UV beständiges Polycarbonat
Farbe	Black

Cables Electrification+signal	
Cable connector	No connector - Cable 4x0.75mm²

Linea Light Group reserves the right, without any advance notice, to change the characteristics of their products, as well as the availability of the same at any time. No product, relative technical data, illustrations and information are binding for Linea Light Group. Linea Light Group will not be held liable for any illustration, text and/or translation\ errors. All values indicated are measured values. There is a +/- 10% tolerance for the flow, CCT and power data.

Poller & Mastaufsatzleuchten | 198-264 V AC /180-280 V DC | 18 topLED 5 W DC - 7 W AC | CRI 80
C01675BGWSR

Single emission bollard & pole for outdoor application. The warm white LED light source with a asymmetric 180° light distribution is composed of 18 topled LEDs with CCT of 3000 K and a CRI 80; the source luminous flux is 905 lm, with a 181.0 lm/W nominal luminous efficacy.

Product suitable for installations in coastal areas with high salinity and strong exposure to atmospheric agents.

The device body is made of die-cast aluminium en ab - 46100 and features a black-grey ral7021 finish, processed by means of open pore anodizing + powder coating. Surface treatment of the product body through aluminum chemical conversion, followed by polyester powder coating, using exclusively coatings compliant with the Qualicoat standard.

The ingress protection degree is IP65; the total weight is of 2.8 kg.

The total absorbed power is 7 W The power supply cable is included and features a 0.2 m length.

The device features protection class II and can be floor-mounted.

Compliant with the EN 60598-1 standard and its specific provisions.

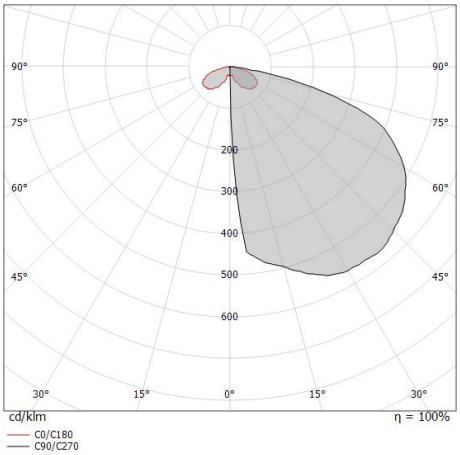

Energieeffizienzklasse
Dieses Produkt enthält eine Lichtquelle der Energieeffizienzklasse D.

Illuminotechnical Eigenschaften	
Light Output Ratio (LOR)	58 %
Lichtstrom (Lichtquelle)	905 lm
Leuchten Lichtstrom	525 lm
Consumption	7 W
Leuchten Lichtausbeute	75 lm/W
Farbtemperatur	3000 K
Standard Deviation of Colour Matching	3 Step MacAdam
Farbwiedergabeindex	80 Ra
Standardumgebungstemperatur	-20 / +50°C
Typische Temperatur am Glas	40°C

LED Life / Failure Ratio
L70 B10 C0 494435h (at Tj 65 Ta 25)
L80 B10 C0 310287h (at Tj 65 Ta 25)
L90 B10 C0 147586h (at Tj 65 Ta 25)

OPTICAL	
Optik C0/C180	151°
Light distribution simmetry	Asymmetrical

Linea Light Group reserves the right, without any advance notice, to change the characteristics of their products, as well as the availability of the same at any time. No product, relative technical data, illustrations and information are binding for Linea Light Group. Linea Light Group will not be held liable for any illustration, text and/or translation\ errors. All values indicated are measured values. There is a +/- 10% tolerance for the flow, CCT and power data.

Buzzer_Q | Bollard & Pole | Accessories
C01675BGWSR

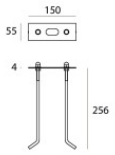

Spannkabel

Material:Edelstahl --, farbe:Stahl.

Code
W-F900004

Linea Light Group reserves the right, without any advance notice, to change the characteristics of their products, as well as the availability of the same at any time. No product, relative technical data, illustrations and information are binding for Linea Light Group. Linea Light Group will not be held liable for any illustration, text and/or translation\ errors. All values indicated are measured values. There is a +/- 10% tolerance for the flow, CCT and power data.