# Buzzer_Q

Poller & Mastaufsatzleuchten
198-264 V AC /180-280 V DC | 48 topLED 11.5 W DC - 14 W AC | CRI 80
**C01674GGNRD**

MARINE GRADE

BUG Rating 0

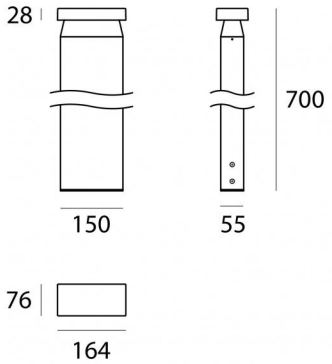


| Technische Daten | |
|---|---|
| Typ | Poller |
| Installationsposition | Boden |
| Installationsumgebung | Outdoor |
| Lichtquelle | LED |
| Circuit structure | topLED |
| Optik | Asymmetric 360° |
| Light emission direction | downward |
| Lampe Nennleistung | 11.5 W DC |
| Gesamtleistung | 14 W |
| Lichtstrom (Lichtquelle) | 2238 lm |
| Nominale Eingangsspannung | 220 - 240 V AC |
| Eingangsspannungsbereich | 198 - 264 V AC |
| Frequency | 50 - 60 Hz |
| Ähnlichste Farbtemperatur / Tone | 4000 K |
| Farbwiedergabeindex | 80 Ra |
| Gleichstrom/Gleichspannung | AC |
| Isolierklasse | 2 |
| IP | IP65 |
| IK | IK10 |
| Glühdrahtprüfung | 850° |
| Direkte Montage auf normal entflammbaren Oberflächen | Ja |
| CE | Ja |
| Einschließlich Driver | Driver |
| Leuchte dimmbar | DALI-2 - PUSH DIM |
| Schwenkbarkeit | Nein |
| Drehbarkeit | Nein |
| Begehbarkeit | Nein |
| Überrollbarkeit | Nein |
| Einschließlich Kabel | Ja |
| Kabellänge | 0.2 m |
| Harzbeschichtung | Ja |
| Typ Lichtabstrahlung | Emissione radiale |
| Nettogewicht | 2.8 Kg |
| Schutz vor elektrostatischen Entladungen | Ja |
| Schutz vor Stoßspannungen | 2 KV |

| Oberfläche Oberfläche Gehäuse | |
|---|---|
| Material | Stranggepresstes Aluminium EN AB - 46100 |
| Farbe | Text brilliant grey RAL 9006 |
| Bearbeitungstyp | Offenporige Anodisierung + Pulverlackierung |

| Oberfläche Oberfläche diffusor | |
|---|---|
| Farbe | Black |

| Oberfläche Oberfläche sockel | |
|---|---|
| Material | UV beständiges Polycarbonat |
| Farbe | Black |

| Cables Electrification+signal | |
|---|---|
| Cable connector | No connector - Cable 4x0.75mm² |



Linea Light Group reserves the right, without any advance notice, to change the characteristics of their products, as well as the availability of the same at any time. No product, relative technical data, illustrations and information are binding for Linea Light Group. Linea Light Group will not be held liable for any illustration, text and/or translation\ errors. All values indicated are measured values. There is a +/- 10% tolerance for the flow, CCT and power data.

Poller & Mastaufsatzleuchten | 198-264 V AC /180-280 V DC | 48 topLED 11.5 W DC - 14 W AC | CRI 80
**C01674GGNRD**

Radial diffusion bollard & pole for outdoor application. The natural white LED light source with a asymmetric 360° light distribution is composed of 48 topled LEDs with CCT of 4000 K and a CRI 80; the source luminous flux is 2238 lm, with a 194.6 lm/W nominal luminous efficacy.

Product suitable for installations in coastal areas with high salinity and strong exposure to atmospheric agents.

The device body is made of die-cast aluminium en ab - 46100 and features a text brilliant grey ral 9006 finish, processed by means of open pore anodizing + powder coating. Surface treatment of the product body through aluminum chemical conversion, followed by polyester powder coating, using exclusively coatings compliant with the Qualicoat standard.

The ingress protection degree is IP65; the total weight is of 2.8 kg.

The total absorbed power is 14 W The power supply cable is included and features a 0.2 m length.

The device features protection class II and can be floor-mounted.

Compliant with the EN 60598-1 standard and its specific provisions.

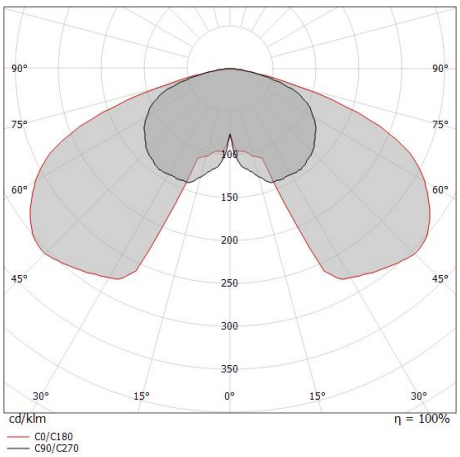


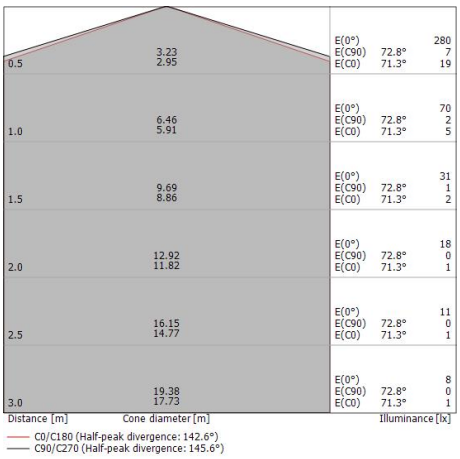


| Energieeffizienzklasse |
|---|
| Dieses Produkt enthält 4 Lichtquellen der Energieeffizienzklasse C. |

| Illuminotechnical Eigenschaften | |
|---|---|
| Light Output Ratio (LOR) | 41 % |
| Lichtstrom (Lichtquelle) | 2238 lm |
| Leuchten Lichtstrom | 923 lm |
| Consumption | 14 W |
| Leuchten Lichtausbeute | 65 lm/W |
| Farbtemperatur | 4000 K |
| Standard Deviation of Colour Matching | 3 Step MacAdam |
| Farbwiedergabeindex | 80 Ra |
| Standardumgebungstemperatur | -20 / +50°C |
| Typische Temperatur am Glas | 40°C |

| LED Life / Failure Ratio |
|---|
| L70 B10 C0 494435h (at Tj 65  Ta 25 ) |
| L80 B10 C0 310287h (at Tj 65  Ta 25 ) |
| L90 B10 C0 147586h (at Tj 65  Ta 25 ) |

| UGR | |
|---|---|
| UGR axial | 28.5 |
| UGR transversal | 30.4 |
| X=4H \| Y=8H | S=0.25H |
| Reflection factor | 70/50/20 |

| OPTICAL | |
|---|---|
| Optik C0/C180 | 143° |
| Light distribution simmetry | Symmetrical |



Linea Light Group reserves the right, without any advance notice, to change the characteristics of their products, as well as the availability of the same at any time. No product, relative technical data, illustrations and information are binding for Linea Light Group. Linea Light Group will not be held liable for any illustration, text and/or translation\ errors. All values indicated are measured values. There is a +/- 10% tolerance for the flow, CCT and power data.

Buzzer_Q | Bollard & Pole | Accessories
**C01674GGNRD**

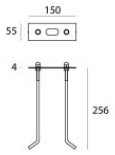


Spannkabel

Material:Edelstahl --, farbe:Stahl.

| Code |
| --- |
| W-F900004 |



Linea Light Group reserves the right, without any advance notice, to change the characteristics of their products, as well as the availability of the same at any time. No product, relative technical data, illustrations and information are binding for Linea Light Group. Linea Light Group will not be held liable for any illustration, text and/or translation\ errors. All values indicated are measured values. There is a +/- 10% tolerance for the flow, CCT and power data.