Buzzer_Q

Poller & Mastaufsatzleuchten
198-264 V AC /180-280 V DC | 48 topLED 11.5 W DC - 14 W AC | CRI 80
C01674DBMRD

MARINE GRADE

BUG Rating 0

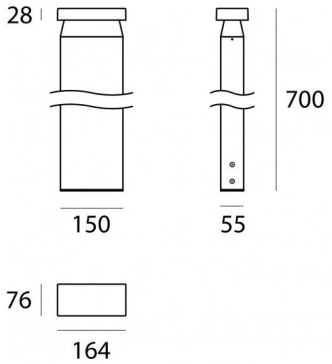

Technische Daten	
Typ	Poller
Installationsposition	Boden
Installationsumgebung	Outdoor
Lichtquelle	LED
Circuit structure	topLED
Optik	Asymmetric 360°
Light emission direction	downward
Lampe Nennleistung	11.5 W DC
Gesamtleistung	14 W
Lichtstrom (Lichtquelle)	2026 lm
Nominale Eingangsspannung	220 - 240 V AC
Eingangsspannungsbereich	198 - 264 V AC
Frequency	50 - 60 Hz
Ähnlichste Farbtemperatur / Tone	2700 K
Farbwiedergabeindex	80 Ra
Gleichstrom/Gleichspannung	AC
Isolierklasse	2
IP	IP65
IK	IK10
Glühdrahtprüfung	850°
Direkte Montage auf normal entflammbaren Oberflächen	Ja
CE	Ja
Einschließlich Driver	Driver
Leuchte dimmbar	DALI-2 - PUSH DIM
Schwenkbarkeit	Nein
Drehbarkeit	Nein
Begehbarkeit	Nein
Überrollbarkeit	Nein
Einschließlich Kabel	Ja
Kabellänge	0.2 m
Harzbeschichtung	Ja
Typ Lichtabstrahlung	Mehrflammig
Nettogewicht	2.8 Kg
Schutz vor elektrostatischen Entladungen	Ja
Schutz vor Stoßspannungen	2 KV

Oberfläche Oberfläche Gehäuse	
Material	Stranggepresstes Aluminium EN AB - 46100
Farbe	Dark brown
Bearbeitungstyp	Offenporige Anodisierung + Pulverlackierung

Oberfläche Oberfläche diffusor	
Farbe	Black

Oberfläche Oberfläche sockel	
Material	UV beständiges Polycarbonat
Farbe	Black

Cables Electrification+signal	
Cable connector	No connector - Cable 4x0.75mm²

Linea Light Group reserves the right, without any advance notice, to change the characteristics of their products, as well as the availability of the same at any time. No product, relative technical data, illustrations and information are binding for Linea Light Group. Linea Light Group will not be held liable for any illustration, text and/or translation\ errors. All values indicated are measured values. There is a +/- 10% tolerance for the flow, CCT and power data.

Poller & Mastaufsatzleuchten | 198-264 V AC /180-280 V DC | 48 topLED 11.5 W DC - 14 W AC | CRI 80
C01674DBMRD

Multiple emission bollard & pole for outdoor application. The super warm white LED light source with a asymmetric 360° light distribution is composed of 48 topled LEDs with CCT of 2700 K and a CRI 80; the source luminous flux is 2026 lm, with a 176.2 lm/W nominal luminous efficacy.

Product suitable for installations in coastal areas with high salinity and strong exposure to atmospheric agents.

The device body is made of die-cast aluminium en ab - 46100 and features a dark brown finish, processed by means of open pore anodizing + powder coating. Surface treatment of the product body through aluminum chemical conversion, followed by polyester powder coating, using exclusively coatings compliant with the Qualicoat standard.

The ingress protection degree is IP65; the total weight is of 2.8 kg.

The total absorbed power is 14 W The power supply cable is included and features a 0.2 m length.

The device features protection class II and can be floor-mounted.

Compliant with the EN 60598-1 standard and its specific provisions.

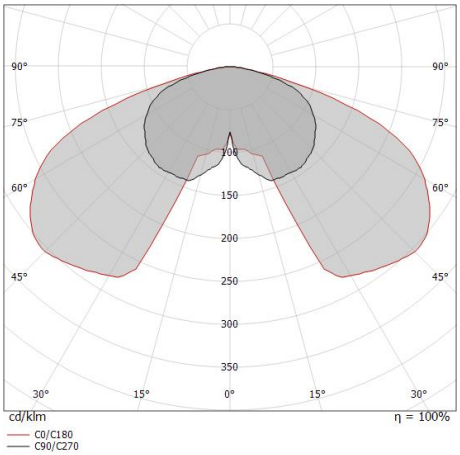

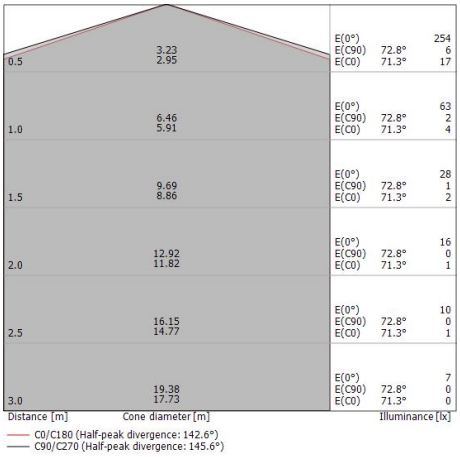

Energieeffizienzklasse
Dieses Produkt enthält 4 Lichtquellen der Energieeffizienzklasse D.

Illuminotechnical Eigenschaften	
Light Output Ratio (LOR)	41 %
Lichtstrom (Lichtquelle)	2026 lm
Leuchten Lichtstrom	836 lm
Consumption	14 W
Leuchten Lichtausbeute	59 lm/W
Farbtemperatur	2700 K
Standard Deviation of Colour Matching	3 Step MacAdam
Farbwiedergabeindex	80 Ra
Standardumgebungstemperatur	-20 / +50°C
Typische Temperatur am Glas	40°C

LED Life / Failure Ratio
L70 B10 C0 494435h (at Tj 65 Ta 25)
L80 B10 C0 310287h (at Tj 65 Ta 25)
L90 B10 C0 147586h (at Tj 65 Ta 25)

UGR	
UGR axial	28.2
UGR transversal	30.1
X=4H | Y=8H	S=0.25H
Reflection factor	70/50/20

OPTICAL	
Optik C0/C180	143°
Light distribution simmetry	Symmetrical

Linea Light Group reserves the right, without any advance notice, to change the characteristics of their products, as well as the availability of the same at any time. No product, relative technical data, illustrations and information are binding for Linea Light Group. Linea Light Group will not be held liable for any illustration, text and/or translation\ errors. All values indicated are measured values. There is a +/- 10% tolerance for the flow, CCT and power data.

Buzzer_Q | Bollard & Pole | Accessories
C01674DBMRD

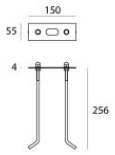

Spannkabel

Material:Edelstahl --, farbe:Stahl.

Code
W-F900004

Linea Light Group reserves the right, without any advance notice, to change the characteristics of their products, as well as the availability of the same at any time. No product, relative technical data, illustrations and information are binding for Linea Light Group. Linea Light Group will not be held liable for any illustration, text and/or translation\ errors. All values indicated are measured values. There is a +/- 10% tolerance for the flow, CCT and power data.