| CRI 80
**C01461BBN1H**

MARINE GRADE



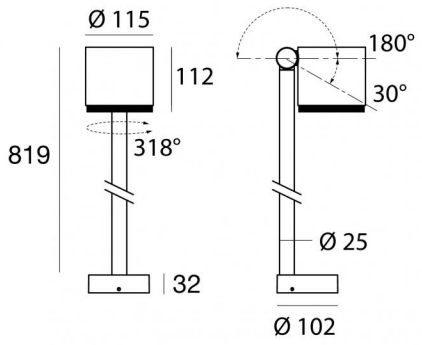


| Technische Daten | |
|---|---|
| Typ | Poller - Oberfläche |
| Installationsposition | Boden |
| Installationsumgebung | Outdoor |
| Lichtquelle | LED |
| Circuit structure | arrayLED |
| Optik | Elliptic M. W. Flood (40°÷49°) x (20°÷40°) |
| Light emission direction | frontal |
| Lampe Nennleistung | 18 W DC |
| Gesamtleistung | 20 W |
| Lichtstrom (Lichtquelle) | 2996 lm |
| Nominale Eingangsspannung | 220 - 240 V AC |
| Eingangsspannungsbereich | 198 - 264 V AC |
| Frequency | 50 - 60 Hz |
| Ähnlichste Farbtemperatur / Tone | 4000 K |
| Farbwiedergabeindex | 80 Ra |
| Gleichstrom/Gleichspannung | AC |
| Isolierklasse | 1 |
| IP | IP65 |
| IK | IK08 |
| Glühdrahtprüfung | 850° |
| Direkte Montage auf normal entflammbaren Oberflächen | Ja |
| CE | Ja |
| Einschließlich Driver | Driver |
| Leuchte dimmbar | DALI-2 - PUSH DIM |
| Schwenkbarkeit | Orientabile |
| Gesamtwinkel (vertikale Ebene) | 210 ° |
| Gesamtwinkel (horizontale Ebene) | 318 ° |
| Drehbarkeit | Nein |
| Begehbarkeit | Nein |
| Überrollbarkeit | Nein |
| Einschließlich Kabel | Ja |
| Kabellänge | 0.1 m |
| Harzbeschichtung | Nein |
| Typ Lichtabstrahlung | Einflammig |
| Nettogewicht | 2.5 Kg |
| Schutz vor elektrostatischen Entladungen | Ja |
| Schutz vor Stoßspannungen | 2 KV |

| Oberfläche Oberfläche Gehäuse | |
|---|---|
| Material | Stranggepresstes Aluminium EN AB - 46100 |
| Farbe | Text black RAL9005 |
| Bearbeitungstyp | Offenporige Anodisierung + Pulverlackierung |

| Oberfläche Oberfläche diffusor | |
|---|---|
| Material | Extra-helles Glas - Gehärtet |
| Farbe | transparent |
| Bearbeitungstyp | Siebdruck |

| Oberfläche Oberfläche sockel | |
|---|---|
| Material | Stranggepresstes Aluminium EN AB - 46100 |
| Farbe | Text black RAL9005 |
| Bearbeitungstyp | Offenporige Anodisierung + Pulverlackierung |

| Cables Electrification | |
|---|---|
| Cable connector | No connector - Neoprene 4x1mm² |



Linea Light Group reserves the right, without any advance notice, to change the characteristics of their products, as well as the availability of the same at any time. No product, relative technical data, illustrations and information are binding for Linea Light Group. Linea Light Group will not be held liable for any illustration, text and/or translation\ errors. All values indicated are measured values. There is a +/- 10% tolerance for the flow, CCT and power data.

| CRI 80
**C01461BBN1H**

Single emission bollard & pole or projectors for outdoor application. The natural white LED light source with a elliptic m. w. flood (40°÷49°) x (20°÷40°) light distribution is composed of 1 arrayled LEDs with CCT of 4000 K and a CRI 80; the source luminous flux is 2996 lm, with a 166.4 lm/W nominal luminous efficacy.

Product suitable for installations in coastal areas with high salinity and strong exposure to atmospheric agents.

The device body is made of die-cast aluminium en ab - 46100 and features a text black ral9005 finish, processed by means of open pore anodizing + powder coating; the diffuser is made of extra clear glass - tempered with a silk-screening treatment. Surface treatment of the product body through aluminum chemical conversion, followed by polyester powder coating, using exclusively coatings compliant with the Qualicoat standard.

The ingress protection degree is IP65; the total weight is of 2.5 kg.

The total absorbed power is 20 W The power supply cable is included and features a 0.1 m length.

The device features protection class I and can be floor or land-mounted.

Compliant with the EN 60598-1 standard and its specific provisions.

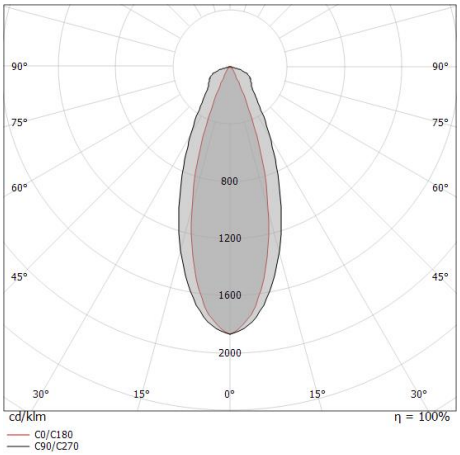


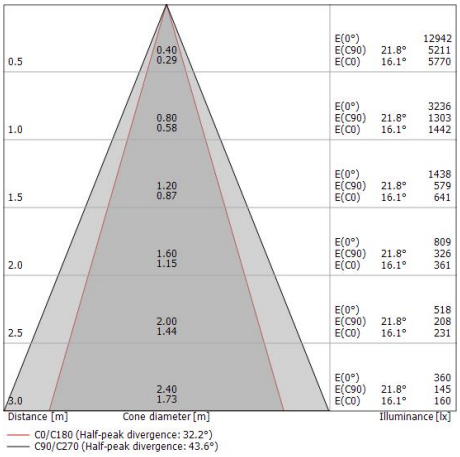


| Energieeffizienzklasse |
|---|
| Dieses Produkt enthält eine Lichtquelle der Energieeffizienzklasse D. |

| Illuminotechnical Eigenschaften | |
|---|---|
| Light Output Ratio (LOR) | 57 % |
| Lichtstrom (Lichtquelle) | 2996 lm |
| Leuchten Lichtstrom | 1729 lm |
| Consumption | 20 W |
| Leuchten Lichtausbeute | 86 lm/W |
| Farbtemperatur | 4000 K |
| Standard Deviation of Colour Matching | 2 Step MacAdam |
| Farbwiedergabeindex | 80 Ra |
| Standardumgebungstemperatur | -20 / +50°C |
| Typische Temperatur am Glas | 40°C |

| LED Life / Failure Ratio |
|---|
| L70 B10 C0 237566h (at Tj 65  Ta 25 ) |
| L80 B10 C0 148737h |
| L90 B10 C0 70385h (at Tj 65  Ta 25 ) |

| UGR | |
|---|---|
| UGR axial | 28.5 |
| UGR transversal | 14.6 |
| X=4H \| Y=8H | S=0.25H |
| Reflection factor | 70/50/20 |

| OPTICAL | |
|---|---|
| Optik C90/C270 | 44° |
| Optik C0/C180 | 32° |
| Light distribution simmetry | Symmetrical 2 assis |



Linea Light Group reserves the right, without any advance notice, to change the characteristics of their products, as well as the availability of the same at any time. No product, relative technical data, illustrations and information are binding for Linea Light Group. Linea Light Group will not be held liable for any illustration, text and/or translation\ errors. All values indicated are measured values. There is a +/- 10% tolerance for the flow, CCT and power data.

Periskop115_RBS | Projectors | Accessories
**C01461BBN1H**



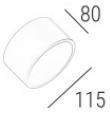


Blendschutz
Blendschutzart: snoot.
Material:Aluminiumlegierung 6060, farbe:Text black RAL9005, bearbeitungstyp :Offenporige Anodisierung + Pulverlackierung.

**Code**
C-U300064






Blendschutz
Blendschutzart: schermo cilindrico 45°.
Material:Aluminiumlegierung 6060, farbe:Text black RAL9005, bearbeitungstyp :Offenporige Anodisierung + Pulverlackierung.

**Code**
C-U300069



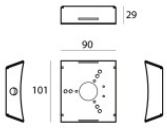


Befestigungssatz - Baum-Befestigungsgurt
Material:Stahl AISI 304, farbe:Stahl.

**Code**
C-F800004



Linea Light Group reserves the right, without any advance notice, to change the characteristics of their products, as well as the availability of the same at any time. No product, relative technical data, illustrations and information are binding for Linea Light Group. Linea Light Group will not be held liable for any illustration, text and/or translation\ errors. All values indicated are measured values. There is a +/- 10% tolerance for the flow, CCT and power data.