Downlights | 1 x powerLED 3 W DC 1000 mA | CRI 90

C01243BBMMW



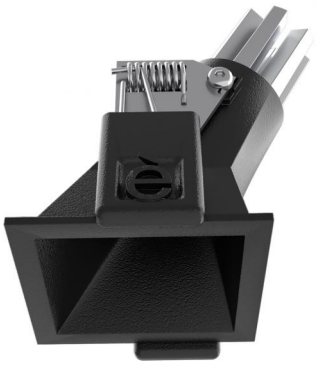

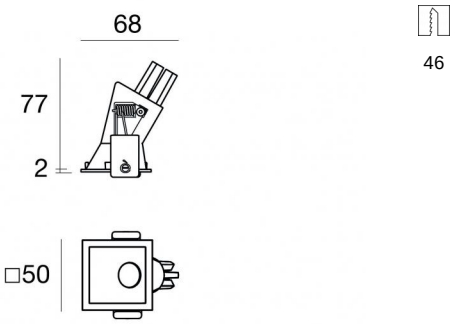

Technische Daten	
Installationsposition	Decke
Installationsumgebung	Indoor
Lichtquelle	LED
Circuit structure	powerLED
Optik	Medium Wide Flood
Light emission direction	downward
Lampe Nennleistung	3 W DC
Lichtstrom (Lichtquelle)	358 lm
Eingangsspannungsbereich	1000mA
Ähnlichste Farbtemperatur / Tone	2700 K
Farbwiedergabeindex	90 Ra
Gleichstrom/Gleichspannung	CC
Isolierklasse	3
IP	IP44
IP optisches System	IP65
Glühdrahtprüfung	850°
Direkte Montage auf normal entflammbaren Oberflächen	Ja
CE	Ja
Einschließlich Driver	Nein
Leuchte dimmbar	DALI - 1-10V
Schwenkbarkeit	Nein
Drehbarkeit	Nein
Begehbarkeit	Nein
Überrollbarkeit	Nein
Einschließlich Kabel	Ja
Kabellänge	0.170 m
Harzbeschichtung	Nein
Einbautiefe	77 mm
Typ Lichtabstrahlung	Einflammig
Nettogewicht	0.047 Kg
Schutz vor elektrostatischen Entladungen	Nein
Schutz vor Stoßspannungen	Nein
Optiktechnologie	F.O.L.
Technische Merkmale des Produkts	TVS

Oberfläche Oberfläche Gehäuse	
Material	Stranggepresstes Aluminium EN AB - 46100
Farbe	Text black RAL9005
Bearbeitungstyp	Pulverbeschichtung mit duroplastischen Pulvern

Oberfläche Oberfläche diffusor	
Material	UV beständiges Polycarbonat
Farbe	Transparent

Oberfläche Oberfläche strahler	
Material	Stranggepresstes Aluminium EN AB - 46100
Bearbeitungstyp	Trommelung

Elektronik



C-E100034
Push and Simply Dim - DALI-2 Controller (4 - 12 art.)



C-E100033
Multi Power 198~264V AC / V DC (4 - 12 art.)



C-E100046
On/Off Driver 100~264V AC / V DC (1 - 6 art.)



C-E100047
Push and Simply Dim - DALI-2 Controller (1 - 3 art.)

Cables Electrification	
Cable connector	No

Linea Light Group reserves the right, without any advance notice, to change the characteristics of their products, as well as the availability of the same at any time. No product, relative technical data, illustrations and information are binding for Linea Light Group. Linea Light Group will not be held liable for any illustration, text and/or translation\ errors. All values indicated are measured values. There is a +/- 10% tolerance for the flow, CCT and power data.

Downlights | 1 x powerLED 3 W DC 1000 mA | CRI 90
C01243BBMMW

Single emission recessed downlights for indoor application. The super warm white LED light source is composed of 1 powerled LEDs with CCT of 2700 K and a CRI 90; the source luminous flux is 358 lm, with a 119.3 lm/W nominal luminous efficacy.

The device body is made of die-cast aluminium en ab - 46100 and features a text black ral9005 finish, processed by means of powder coating with thermosetting powders; the diffuser is made of uv resistant polycarbonate.

The ingress protection degree is IP44; the total weight is of 0.047 kg. The power supply driver is not provided and is to be ordered separately.

The total absorbed power is 3 W The power supply cable is included and features a 0.170 m length.

The device features protection class III and can be ceiling-mounted, with a 46 x 46 mm hole (in plasterboard).

Compliant with the EN 60598-1 standard and its specific provisions.

Energieeffizienzklasse
Dieses Produkt enthält eine Lichtquelle der Energieeffizienzklasse D.

Illuminotechnical Eigenschaften	
Light Output Ratio (LOR)	38 %
Lichtstrom (Lichtquelle)	358 lm
Leuchten Lichtstrom	137 lm
Consumption	2,0 W
Leuchten Lichtausbeute	68 lm/W
Farbtemperatur	2700 K
Standard Deviation of Colour Matching	3 Step MacAdam
Farbwiedergabeindex	90 Ra
Standardumgebungstemperatur	-20 / +50°C
Typische Temperatur am Glas	40°C

LED Life / Failure Ratio
L70 B20 C0 716641h (at Tj 60 Ta 25)
L80 B10 C0 445035h (at Tj 65 Ta 25)
L90 B10 C0 205461h (at Tj 65 Ta 25)

OPTICAL	
Optik C90/C270	48°
Light distribution simmetry	Asymmetrical

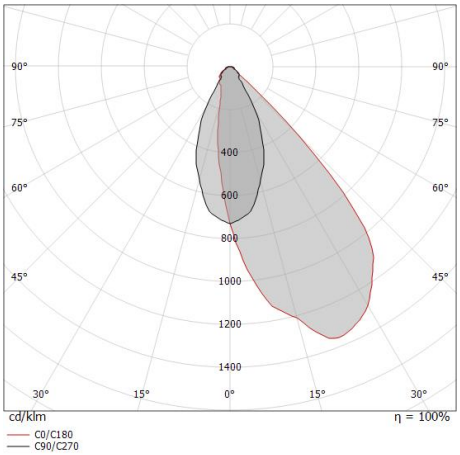

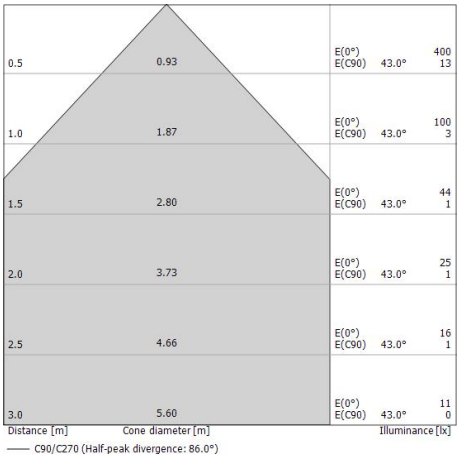

Linea Light Group reserves the right, without any advance notice, to change the characteristics of their products, as well as the availability of the same at any time. No product, relative technical data, illustrations and information are binding for Linea Light Group. Linea Light Group will not be held liable for any illustration, text and/or translation\ errors. All values indicated are measured values. There is a +/- 10% tolerance for the flow, CCT and power data.