Periskop115_RBS

Poller & Mastaufsatzleuchten - Scheinwerfer
1 arrayLED 18 W DC 500 mA | RGBW - 3000
C01199DBVML

MARINE GRADE



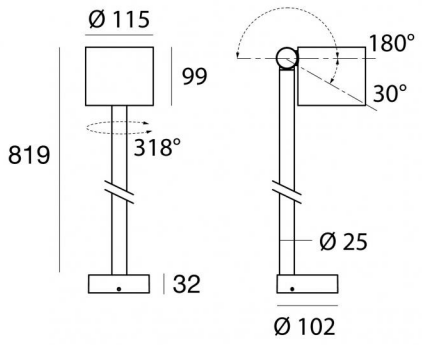

Technische Daten	
Typ	Poller - Oberfläche
Installationsposition	Boden
Installationsumgebung	Outdoor
Lichtquelle	LED
Circuit structure	arrayLED
Optik	Medium Flood
Light emission direction	frontal
Lampe Nennleistung	18 W DC
Lichtstrom (Lichtquelle)	994 lm
Eingangsspannungsbereich	500mA
Ähnlichste Farbtemperatur / Tone	RGBW - 3000 K
Gleichstrom/Gleichspannung	CC
Isolierklasse	3
IP	IP65
IK	IK08
Glühdrahtprüfung	850°
Direkte Montage auf normal entflammbaren Oberflächen	Ja
CE	Ja
Einschließlich Driver	Nein
Leuchte dimmbar	Ja
Schwenkbarkeit	Orientabile
Gesamtwinkel (vertikale Ebene)	210 °
Gesamtwinkel (horizontale Ebene)	318 °
Drehbarkeit	Nein
Begehbarkeit	Nein
Überrollbarkeit	Nein
Einschließlich Kabel	Ja
Kabellänge	0.1 m
Harzbeschichtung	Nein
Typ Lichtabstrahlung	Einflammig
Nettogewicht	2.5 Kg
Schutz vor elektrostatischen Entladungen	Nein
Schutz vor Stoßspannungen	Nein

Oberfläche Oberfläche Gehäuse	
Material	Stranggepresstes Aluminium EN AB - 46100
Farbe	Dark brown
Bearbeitungstyp	Offenporige Anodisierung + Pulverlackierung

Oberfläche Oberfläche diffusor	
Material	Extra-helles Glas - Gehärtet
Farbe	transparent
Bearbeitungstyp	Siebdruck

Oberfläche Oberfläche sockel	
Material	Stranggepresstes Aluminium EN AB - 46100
Farbe	Dark brown
Bearbeitungstyp	Offenporige Anodisierung + Pulverlackierung

Elektronik



C-E500024
DMX-RDM - NFC Multi Channel and Power 4ch.
22~50V DC (1 art.)

Cables Electrification	
Cable connector	No connector - Neoprene 9x0.5mm²

Nennlichtstrom für eine einzelne Farbe - RGBW - 3000K

N. Led	Rot	Grün	Blau	Weiß
1	177 lm	422 lm	75 lm	320 lm

Linea Light Group reserves the right, without any advance notice, to change the characteristics of their products, as well as the availability of the same at any time. No product, relative technical data, illustrations and information are binding for Linea Light Group. Linea Light Group will not be held liable for any illustration, text and/or translation\ errors. All values indicated are measured values. There is a +/- 10% tolerance for the flow, CCT and power data.

Poller & Mastaufsatzleuchten - Scheinwerfer | 1 arrayLED 18 W DC 500 mA | RGBW - 3000
C01199DBVML

Single emission bollard & pole or projectors for outdoor application. The RGBW - 3000 K LED light source with a medium flood light distribution is composed of 1 arrayled LEDs with CCT of RGB-W 3000 K the source luminous flux is 994 lm, with a 55.2 lm/W nominal luminous efficacy.

Product suitable for installations in coastal areas with high salinity and strong exposure to atmospheric agents.

The device body is made of die-cast aluminium en ab - 46100 and features a dark brown finish, processed by means of open pore anodizing + powder coating; the diffuser is made of extra clear glass - tempered with a silk-screening treatment. Surface treatment of the product body through aluminum chemical conversion, followed by polyester powder coating, using exclusively coatings compliant with the Qualicoat standard.

The ingress protection degree is IP65; the total weight is of 2.5 kg. The power supply driver is not provided and is to be ordered separately.

The total absorbed power is 18 W The power supply cable is included and features a 0.1 m length.

The device features protection class III and can be floor or land-mounted.

Compliant with the EN 60598-1 standard and its specific provisions.

Illuminotechnical Eigenschaften	
Standard Deviation of Colour Matching	5 Step MacAdam
Standardumgebungstemperatur	-20 / +50°C
Typische Temperatur am Glas	40°C

Linea Light Group reserves the right, without any advance notice, to change the characteristics of their products, as well as the availability of the same at any time. No product, relative technical data, illustrations and information are binding for Linea Light Group. Linea Light Group will not be held liable for any illustration, text and/or translation\ errors. All values indicated are measured values. There is a +/- 10% tolerance for the flow, CCT and power data.

Periskop115_RBS | Projectors | Accessories
C01199DBVML



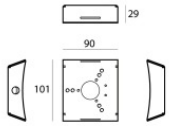

Befestigungssatz - Baum-Befestigungsgurt
Material:Stahl AISI 304, farbe:Stahl.

Code
C-F800004



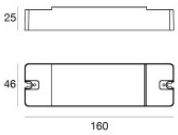

Dimmer - Dimmung über Funkfernbedienung, einzelnen N/O?Taster oder Wi Fi?Netzwerk (Tuya Smart APP). Gerät mit 4 Kanälen: Der erste Dip?Schalter ist für die Stromauswahl vorgesehen, der zweite Dip?Schalter für die Konfiguration: MONO, DYNAMIC, RGB, RGBW. Schutz gegen Übertemperatur, Überlastung, Leitungsunterbrechung und Kurzschluss an der Ausgangsleitung.
RF Remote controller

Code
C-E700003



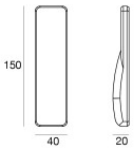

Remote RF - 2.4G?RF?Fernbedienung mit mehreren Funktionen: Dimmen, Geschwindigkeit, Ein/Aus

Code
C-W600001

Linea Light Group reserves the right, without any advance notice, to change the characteristics of their products, as well as the availability of the same at any time. No product, relative technical data, illustrations and information are binding for Linea Light Group. Linea Light Group will not be held liable for any illustration, text and/or translation\ errors. All values indicated are measured values. There is a +/- 10% tolerance for the flow, CCT and power data.