Poller & Mastaufsatzleuchten - Scheinwerfer
198-264 V | 1 arrayLED 18 W DC - 20 W AC | CRI 80
C01197GGWMW

MARINE GRADE



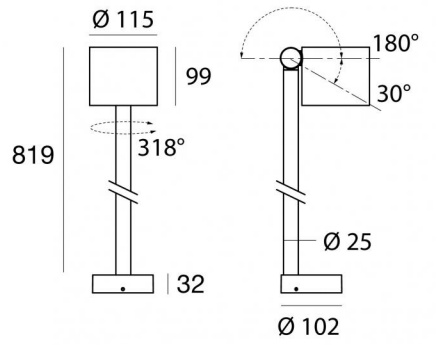

Technische Daten	
Typ	Poller - Oberfläche
Installationsposition	Boden
Installationsumgebung	Outdoor
Lichtquelle	LED
Circuit structure	arrayLED
Optik	Medium Wide Flood
Light emission direction	frontal
Lampe Nennleistung	18 W DC
Gesamtleistung	20 W
Lichtstrom (Lichtquelle)	2889 lm
Nominale Eingangsspannung	220 - 240 V AC
Eingangsspannungsbereich	198 - 264 V AC
Frequency	50 - 60 Hz
Ähnlichste Farbtemperatur / Tone	3000 K
Farbwiedergabeindex	80 Ra
Gleichstrom/Gleichspannung	AC
Isolierklasse	1
IP	IP65
IK	IK08
Glühdrahtprüfung	850°
Direkte Montage auf normal entflammbaren Oberflächen	Ja
CE	Ja
Einschließlich Driver	Driver
Leuchte dimmbar	Nein
Schwenkbarkeit	Orientabile
Gesamtwinkel (vertikale Ebene)	210 °
Gesamtwinkel (horizontale Ebene)	318 °
Drehbarkeit	Nein
Begehbarkeit	Nein
Überrollbarkeit	Nein
Einschließlich Kabel	Ja
Kabellänge	0.1 m
Harzbeschichtung	Nein
Typ Lichtabstrahlung	Einflammig
Nettogewicht	2.5 Kg
Schutz vor elektrostatischen Entladungen	Ja
Schutz vor Stoßspannungen	1 KV
Optiktechnologie	Honey comb

Oberfläche Oberfläche Gehäuse	
Material	Stranggepresstes Aluminium EN AB - 46100
Farbe	Text brilliant grey RAL 9006
Bearbeitungstyp	Offenporige Anodisierung + Pulverlackierung

Oberfläche Oberfläche diffusor	
Material	Extra-helles Glas - Gehärtet
Farbe	transparent
Bearbeitungstyp	Siebdruck

Oberfläche Oberfläche sockel	
Material	Stranggepresstes Aluminium EN AB - 46100
Farbe	Text brilliant grey RAL 9006
Bearbeitungstyp	Offenporige Anodisierung + Pulverlackierung

Cables Electrification	
Cable connector	No connector - Neoprene 2x0.75mm²

Linea Light Group reserves the right, without any advance notice, to change the characteristics of their products, as well as the availability of the same at any time. No product, relative technical data, illustrations and information are binding for Linea Light Group. Linea Light Group will not be held liable for any illustration, text and/or translation\ errors. All values indicated are measured values. There is a +/- 10% tolerance for the flow, CCT and power data.

Poller & Mastaufsatzleuchten - Scheinwerfer | 198-264 V | 1 arrayLED 18 W DC - 20 W AC | CRI 80

C01197GGWMW

Single emission bollard & pole or projectors for outdoor application. The warm white LED light source with a medium wide flood light distribution is composed of 1 arrayled LEDs with CCT of 3000 K and a CRI 80; the source luminous flux is 2889 lm, with a 160.5 lm/W nominal luminous efficacy.

Product suitable for installations in coastal areas with high salinity and strong exposure to atmospheric agents.

The device body is made of die-cast aluminium en ab - 46100 and features a text brilliant grey ral 9006 finish, processed by means of open pore anodizing + powder coating; the diffuser is made of extra clear glass - tempered with a silk-screening treatment. Surface treatment of the product body through aluminum chemical conversion, followed by polyester powder coating, using exclusively coatings compliant with the Qualicoat standard.

The ingress protection degree is IP65; the total weight is of 2.5 kg.

The total absorbed power is 20 W The power supply cable is included and features a 0.1 m length.

The device features protection class I and can be floor or land-mounted.

Compliant with the EN 60598-1 standard and its specific provisions.

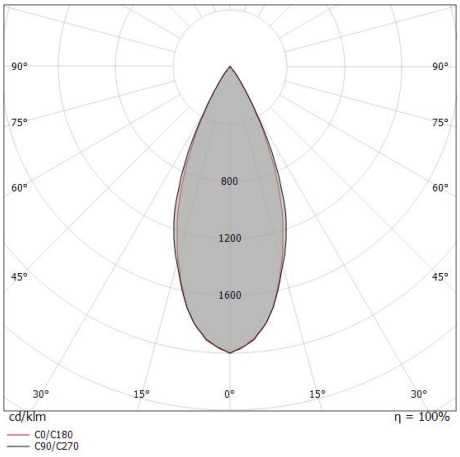

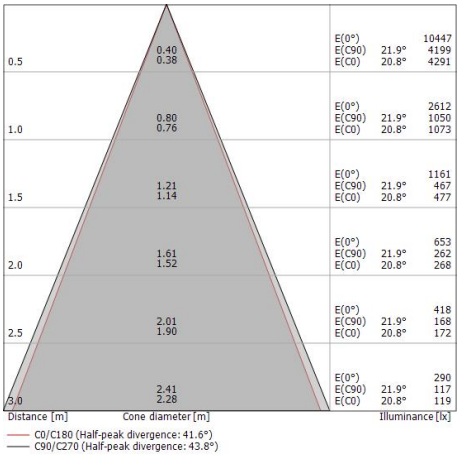

Energieeffizienzklasse
Dieses Produkt enthält eine Lichtquelle der Energieeffizienzklasse D.

Illuminotechnical Eigenschaften	
Light Output Ratio (LOR)	45 %
Lichtstrom (Lichtquelle)	2889 lm
Leuchten Lichtstrom	1306 lm
Consumption	20 W
Leuchten Lichtausbeute	65 lm/W
Farbtemperatur	3000 K
Standard Deviation of Colour Matching	2 Step MacAdam
Farbwiedergabeindex	80 Ra
Standardumgebungstemperatur	-20 / +50°C
Typische Temperatur am Glas	40°C

LED Life / Failure Ratio
L70 B10 C0 237566h (at Tj 65 Ta 25)
L80 B10 C0 148737h (at Tj 65 Ta 25)
L90 B10 C0 70385h (at Tj 65 Ta 25)

UGR	
UGR axial	12.2
UGR transversal	11.6
X=4H | Y=8H	S=0.25H
Reflection factor	70/50/20

OPTICAL	
Optik C0/C180	42°
Light distribution simmetry	Symmetrical

Linea Light Group reserves the right, without any advance notice, to change the characteristics of their products, as well as the availability of the same at any time. No product, relative technical data, illustrations and information are binding for Linea Light Group. Linea Light Group will not be held liable for any illustration, text and/or translation\ errors. All values indicated are measured values. There is a +/- 10% tolerance for the flow, CCT and power data.

Periskop115_RBS | Projectors | Accessories
C01197GGWMW



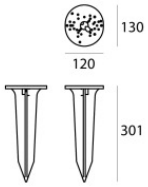

Erdspießen

installationsposition: terreno,Material Verkleidung: pc

Code

C-F500007

Linea Light Group reserves the right, without any advance notice, to change the characteristics of their products, as well as the availability of the same at any time. No product, relative technical data, illustrations and information are binding for Linea Light Group. Linea Light Group will not be held liable for any illustration, text and/or translation\ errors. All values indicated are measured values. There is a +/- 10% tolerance for the flow, CCT and power data.