Poller & Mastaufsatzleuchten - Scheinwerfer
198-264 V AC /200-300 V DC | 1 arrayLED 18 W DC - 20 W AC | CRI 80
C01196GGM1H

MARINE GRADE



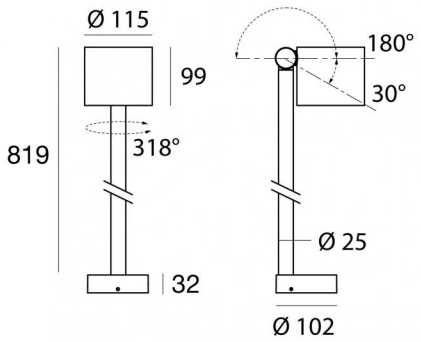

Technische Daten	
Typ	Poller - Oberfläche
Installationsposition	Boden
Installationsumgebung	Outdoor
Lichtquelle	LED
Circuit structure	arrayLED
Optik	Elliptic M. W. Flood (40°÷49°) x (20°÷40°)
Light emission direction	frontal
Lampe Nennleistung	18 W DC
Gesamtleistung	20 W
Lichtstrom (Lichtquelle)	2773 lm
Nominale Eingangsspannung	220 - 240 V AC
Eingangsspannungsbereich	198 - 264 V AC
Frequency	50 - 60 Hz
Ähnlichste Farbtemperatur / Tone	2700 K
Farbwiedergabeindex	80 Ra
Gleichstrom/Gleichspannung	AC
Isolierklasse	1
IP	IP65
IK	IK08
Glühdrahtprüfung	850°
Direkte Montage auf normal entflammbaren Oberflächen	Ja
CE	Ja
Einschließlich Driver	Driver
Leuchte dimmbar	DALI-2 - PUSH DIM
Schwenkbarkeit	Orientabile
Gesamtwinkel (vertikale Ebene)	210 °
Gesamtwinkel (horizontale Ebene)	318 °
Drehbarkeit	Nein
Begehbarkeit	Nein
Überrollbarkeit	Nein
Einschließlich Kabel	Ja
Kabellänge	0.1 m
Harzbeschichtung	Nein
Typ Lichtabstrahlung	Einflammig
Nettogewicht	2.5 Kg
Schutz vor elektrostatischen Entladungen	Ja
Schutz vor Stoßspannungen	2 KV

Oberfläche Oberfläche Gehäuse	
Material	Stranggepresstes Aluminium EN AB - 46100
Farbe	Text brilliant grey RAL 9006
Bearbeitungstyp	Offenporige Anodisierung + Pulverlackierung

Oberfläche Oberfläche diffusor	
Material	Extra-helles Glas - Gehärtet
Farbe	transparent
Bearbeitungstyp	Siebdruck

Oberfläche Oberfläche sockel	
Material	Stranggepresstes Aluminium EN AB - 46100
Farbe	Text brilliant grey RAL 9006
Bearbeitungstyp	Offenporige Anodisierung + Pulverlackierung

Cables Electrification+signal	
Cable connector	No connector - Neoprene 4x1mm²

Linea Light Group reserves the right, without any advance notice, to change the characteristics of their products, as well as the availability of the same at any time. No product, relative technical data, illustrations and information are binding for Linea Light Group. Linea Light Group will not be held liable for any illustration, text and/or translation\ errors. All values indicated are measured values. There is a +/- 10% tolerance for the flow, CCT and power data.

Poller & Mastaufsatzleuchten - Scheinwerfer | 198-264 V AC /200-300 V DC | 1 arrayLED 18 W DC - 20 W AC | CRI 80

C01196GGM1H

Single emission bollard & pole or projectors for outdoor application. The super warm white LED light source with a elliptic m. w. flood (40°÷49°) x (20°÷40°) light distribution is composed of 1 arrayled LEDs with CCT of 2700 K and a CRI 80; the source luminous flux is 2773 lm, with a 154.1 lm/W nominal luminous efficacy.

Product suitable for installations in coastal areas with high salinity and strong exposure to atmospheric agents.

The device body is made of die-cast aluminium en ab - 46100 and features a text brilliant grey ral 9006 finish, processed by means of open pore anodizing + powder coating; the diffuser is made of extra clear glass - tempered with a silk-screening treatment. Surface treatment of the product body through aluminum chemical conversion, followed by polyester powder coating, using exclusively coatings compliant with the Qualicoat standard.

The ingress protection degree is IP65; the total weight is of 2.5 kg.

The total absorbed power is 20 W The power supply cable is included and features a 0.1 m length.

The device features protection class I and can be floor or land-mounted.

Compliant with the EN 60598-1 standard and its specific provisions.

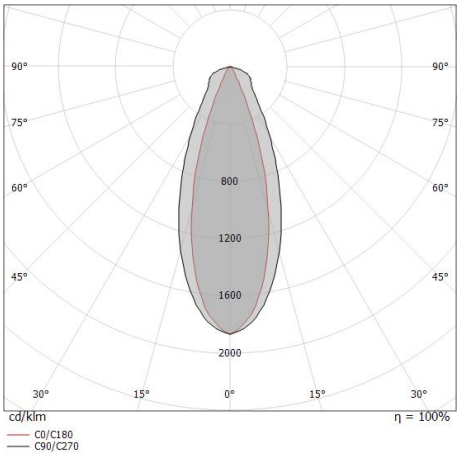

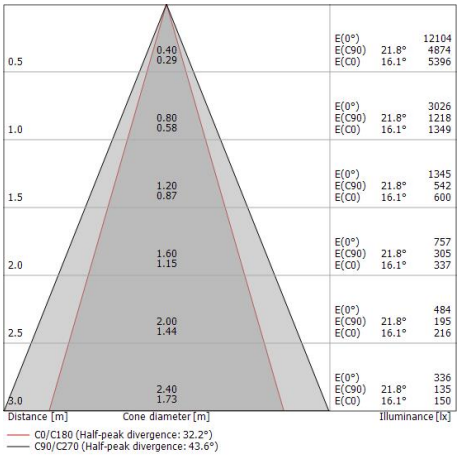

Energieeffizienzklasse
Dieses Produkt enthält eine Lichtquelle der Energieeffizienzklasse D.

Illuminotechnical Eigenschaften	
Light Output Ratio (LOR)	58 %
Lichtstrom (Lichtquelle)	2773 lm
Leuchten Lichtstrom	1617 lm
Consumption	20 W
Leuchten Lichtausbeute	80 lm/W
Farbtemperatur	2700 K
Standard Deviation of Colour Matching	2 Step MacAdam
Farbwiedergabeindex	80 Ra
Standardumgebungstemperatur	-20 / +50°C
Typische Temperatur am Glas	40°C

LED Life / Failure Ratio
L70 B10 C0 237566h (at Tj 65 Ta 25)
L80 B10 C0 148737h (at Tj 65 Ta 25)
L90 B10 C0 70385h (at Tj 65 Ta 25)

UGR	
UGR axial	28.2
UGR transversal	14.4
X=4H | Y=8H	S=0.25H
Reflection factor	70/50/20

OPTICAL	
Optik C90/C270	44°
Optik C0/C180	32°
Light distribution simmetry	Symmetrical 2 assis

Linea Light Group reserves the right, without any advance notice, to change the characteristics of their products, as well as the availability of the same at any time. No product, relative technical data, illustrations and information are binding for Linea Light Group. Linea Light Group will not be held liable for any illustration, text and/or translation\ errors. All values indicated are measured values. There is a +/- 10% tolerance for the flow, CCT and power data.

Periskop115_RBS | Projectors | Accessories
C01196GGM1H



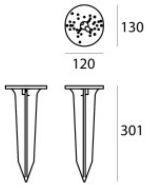

Erdspießen

installationsposition: terreno,Material Verkleidung: pc

Code

C-F500007

Linea Light Group reserves the right, without any advance notice, to change the characteristics of their products, as well as the availability of the same at any time. No product, relative technical data, illustrations and information are binding for Linea Light Group. Linea Light Group will not be held liable for any illustration, text and/or translation\ errors. All values indicated are measured values. There is a +/- 10% tolerance for the flow, CCT and power data.