Emy

Deckenleuchten | 240 topLED 34 W DC 1000 mA
CRI 90
C01130WSWDI

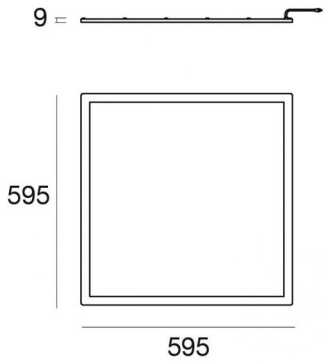

Technische Daten	
Designer	Linea Light
Jahr der Verwirklichung	2020
Typ	Deckenleuchten
Installationsposition	Decke
Installationsumgebung	Indoor
Lichtquelle	LED
Circuit structure	topLED
Optik	Diffuses
Light emission direction	downward
Lampe Nennleistung	34 W DC
Lichtstrom (Lichtquelle)	4400 lm
Eingangsspannungsbereich	1000mA
Ähnlichste Farbtemperatur / Tone	3000 K
Farbwiedergabeindex	90 Ra
Gleichstrom/Gleichspannung	CC
Isolierklasse	3
IP	IP20
IK	IK08
Glühdrahtprüfung	650°
Direkte Montage auf normal entflammbaren Oberflächen	Ja
CE	Ja
ETL	Ja
Einschließlich Driver	Nein
Leuchte dimmbar	DALI-2 - PUSH DIM
Schwenkbarkeit	Nein
Drehbarkeit	Nein
Begehbarkeit	Nein
Überrollbarkeit	Nein
Einschließlich Kabel	Nein
Harzbeschichtung	Nein
Typ Lichtabstrahlung	Einflammig
Nettogewicht	2.1 Kg
Schutz vor elektrostatischen Entladungen	Ja
Schutz vor Stoßspannungen	Nein

Oberfläche Oberfläche Gehäuse	
Material	Aluminium
Farbe	weiß RAL 9003
Bearbeitungstyp	Lackierung

Oberfläche Oberfläche diffusor	
Material	PMMA
Farbe	Weiß

Oberfläche Oberfläche fassung	
Material	Aluminium
Farbe	weiß RAL 9003
Bearbeitungstyp	Lackierung

Elektronik

99971.02
Push and Simply Dim - DALI-2 Controller (1 art.)

C-E100045
On/Off Driver 200~264V AC (- art.)

Linea Light Group reserves the right, without any advance notice, to change the characteristics of their products, as well as the availability of the same at any time. No product, relative technical data, illustrations and information are binding for Linea Light Group. Linea Light Group will not be held liable for any illustration, text and/or translation\ errors. All values indicated are measured values. There is a +/- 10% tolerance for the flow, CCT and power data.

Deckenleuchten | 240 topLED 34 W DC 1000 mA | CRI 90
C01130WSWDI

Single emission ceiling downlights for indoor application. The warm white LED light source with a diffused light distribution is composed of 240 topled LEDs with CCT of 3000 K and a CRI 90; the source luminous flux is 4400 lm, with a 129.4 lm/W nominal luminous efficacy.

The device body is made of aluminium and features a white ral 9003 finish, processed by means of coating; the diffuser is made of pmma; the mounting frame is made of aluminium, with a white ral 9003 finish, processed by means of coating.

The ingress protection degree is IP20; the total weight is of 2.1 kg. The power supply driver is not provided and is to be ordered separately.

The total absorbed power is 34 W

The device features protection class III and can be ceiling-mounted.

Compliant with the EN 60598-1 standard and its specific provisions.

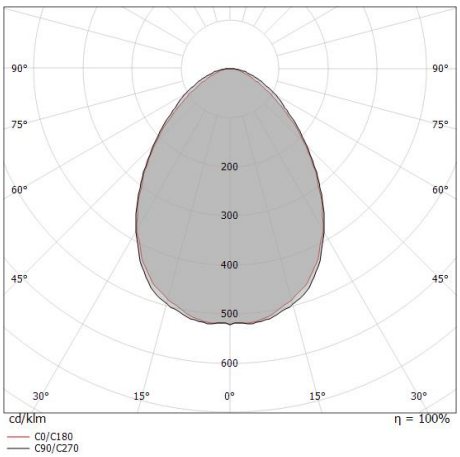

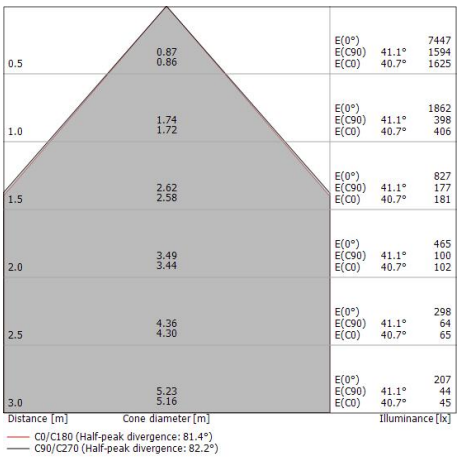

Energieeffizienzklasse
Dieses Produkt enthält 2 Lichtquellen der Energieeffizienzklasse E.

Illuminotechnical Eigenschaften	
Light Output Ratio (LOR)	81 %
Lichtstrom (Lichtquelle)	4400 lm
Leuchten Lichtstrom	3569 lm
Consumption	40 W
Leuchten Lichtausbeute	89 lm/W
Farbtemperatur	3000 K
Standard Deviation of Colour Matching	3 Step MacAdam
Farbwiedergabeindex	90 Ra
Verbindungstemperatur (Leuchte)	80
Standardumgebungstemperatur	-20 / +50°C

LED Life / Failure Ratio
L90 B10 C0 50000h

UGR	
UGR axial	18.1
UGR transversal	18
X=4H | Y=8H	S=0.25H
Reflection factor	70/50/20

OPTICAL	
Optik C0/C180	81°
Light distribution simmetry	Symmetrical

Linea Light Group reserves the right, without any advance notice, to change the characteristics of their products, as well as the availability of the same at any time. No product, relative technical data, illustrations and information are binding for Linea Light Group. Linea Light Group will not be held liable for any illustration, text and/or translation\ errors. All values indicated are measured values. There is a +/- 10% tolerance for the flow, CCT and power data.

Emy | Ceiling Downlights | Accessories
C01130WSWDI

Rahmen - Rahmen für Decken Aufbaumontage

Code
99556

Kabel für Aufhängung

Code
99584

Linea Light Group reserves the right, without any advance notice, to change the characteristics of their products, as well as the availability of the same at any time. No product, relative technical data, illustrations and information are binding for Linea Light Group. Linea Light Group will not be held liable for any illustration, text and/or translation\ errors. All values indicated are measured values. There is a +/- 10% tolerance for the flow, CCT and power data.