Tour_Slim_PD Complete

Pendelleuchte | 198-264 V
816 topLED 31.5 W DC - 35 W AC | CRI 90
C01055WHWDI

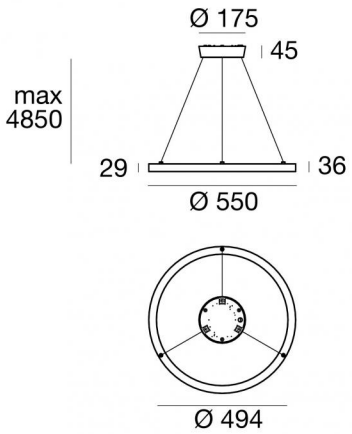

Technische Daten	
Typ	Oberfläche
Installationsposition	Decke
Installationsumgebung	Indoor
Lichtquelle	LED
Circuit structure	topLED
Optik	Diffuses
Light emission direction	downward
Lampe Nennleistung	31.5 W DC
Gesamtleistung	35 W
Lichtstrom (Lichtquelle)	3612 lm
Nominale Eingangsspannung	220 - 240 V AC
Eingangsspannungsbereich	198 - 264 V AC
Frequency	50 - 60 Hz
Ähnlichste Farbtemperatur / Tone	3000 K
Farbwiedergabeindex	90 Ra
Gleichstrom/Gleichspannung	AC
Isolierklasse	1
IP	IP40
Glühdrahtprüfung	Nein
Direkte Montage auf normal entflammbaren Oberflächen	Ja
CE	Ja
Einschließlich Driver	Driver
Leuchte dimmbar	PUSH DIM - Phase cut
Schwenkbarkeit	Nein
Drehbarkeit	Nein
Begehbarkeit	Nein
Überrollbarkeit	Nein
Einschließlich Kabel	Ja
Kabellänge	4.85 m
Harzbeschichtung	Nein
Typ Lichtabstrahlung	Einflammig
Nettogewicht	2.3 Kg
Schutz vor elektrostatischen Entladungen	Ja
Schutz vor Stoßspannungen	2 KV
Optiktechnologie	Dot free

Oberfläche Oberfläche Gehäuse	
Material	Aluminiumlegierung 6060
Farbe	Text white RAL9003
Bearbeitungstyp	Pulverbeschichtung mit duroplastischen Pulvern

Oberfläche Oberfläche diffusor	
Farbe	Opal

Cables Electrification+suspension	
Max. Kabellänge	4850 mm

Linea Light Group reserves the right, without any advance notice, to change the characteristics of their products, as well as the availability of the same at any time. No product, relative technical data, illustrations and information are binding for Linea Light Group. Linea Light Group will not be held liable for any illustration, text and/or translation\ errors. All values indicated are measured values. There is a +/- 10% tolerance for the flow, CCT and power data.

Tour_Slim_PD Complete

Pendelleuchte | 198-264 V | 816 topLED 31.5 W DC - 35 W AC | CRI 90
C01055WHWDI

Single emission pendant luminaires for indoor application. The warm white LED light source with a diffused light distribution is composed of 816 stripled LEDs with CCT of 3000 K and a CRI 90; the source luminous flux is 3612 lm, with a 114.7 lm/W nominal luminous efficacy.

The device body is made of aluminium alloy 6060 and features a text white ral9003 finish, processed by means of powder coating with thermosetting powders; the diffuser is made of silicone.

The ingress protection degree is IP40; the total weight is of 2.3 kg.

The total absorbed power is 35 W The power supply cable is included and features a 4.85 m length.

The device features protection class I and can be ceiling-mounted.

Compliant with the EN 60598-1 standard and its specific provisions.

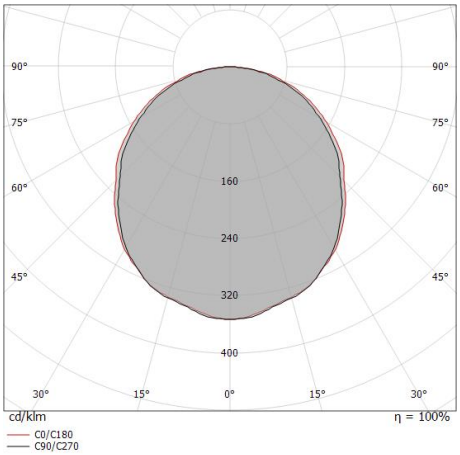

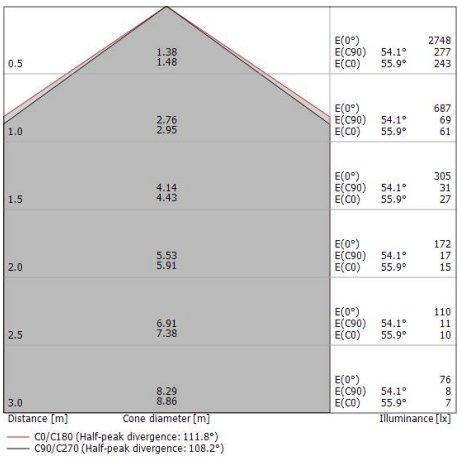

Energieeffizienzklasse
Dieses Produkt enthält eine Lichtquelle der Energieeffizienzklasse E.

Illuminotechnical Eigenschaften	
Light Output Ratio (LOR)	53 %
Lichtstrom (Lichtquelle)	3612 lm
Leuchten Lichtstrom	1945 lm
Consumption	35 W
Leuchten Lichtausbeute	55 lm/W
Farbtemperatur	3000 K
Standard Deviation of Colour Matching	3 Step MacAdam
Farbwiedergabeindex	90 Ra
Standardumgebungstemperatur	-20 / +50°C

LED Life / Failure Ratio
L70 B00 C0 60000h

UGR	
UGR axial	20.2
UGR transversal	20.8
X=4H | Y=8H	S=0.25H
Reflection factor	70/50/20

OPTICAL	
Optik C90/C270	108°
Optik C0/C180	112°
Light distribution simmetry	Symmetrical 2 assis

Linea Light Group reserves the right, without any advance notice, to change the characteristics of their products, as well as the availability of the same at any time. No product, relative technical data, illustrations and information are binding for Linea Light Group. Linea Light Group will not be held liable for any illustration, text and/or translation\ errors. All values indicated are measured values. There is a +/- 10% tolerance for the flow, CCT and power data.