Wandleuchten | 1 x powerLED 1 W DC 350 mA | CRI 90

C00943WHMWW



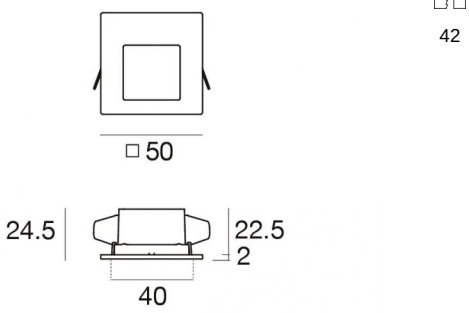

Technische Daten	
Installationsposition	Wand
Installationsumgebung	Indoor
Lichtquelle	LED
Circuit structure	powerLED
Optik	Asymmetric Wallwasher
Light emission direction	downward
Lampe Nennleistung	1 W DC
Lichtstrom (Lichtquelle)	124 lm
Eingangsspannungsbereich	350mA
Ähnlichste Farbtemperatur / Tone	2700 K
Farbwiedergabeindex	90 Ra
Gleichstrom/Gleichspannung	CC
Isolierklasse	3
IP	IP40
Glühdrahtprüfung	850°
Direkte Montage auf normal entflammbaren Oberflächen	Ja
CE	Ja
Einschließlich Driver	Nein
Leuchte dimmbar	Ja
Schwenkbarkeit	Nein
Drehbarkeit	Nein
Begehbarkeit	Nein
Überrollbarkeit	Nein
Einschließlich Kabel	Ja
Kabellänge	0.17 m
Harzbeschichtung	Nein
Einbautiefe	22.5 mm
Typ Lichtabstrahlung	Einflammig
Nettogewicht	0.027 Kg
Schutz vor elektrostatischen Entladungen	Nein
Schutz vor Stoßspannungen	Nein
Technische Merkmale des Produkts	TVS

Oberfläche Oberfläche Gehäuse	
Material	Stranggepresstes Aluminium EN AB - 46100
Farbe	Grau
Bearbeitungstyp	Pulverbeschichtung mit duroplastischen Pulvern

Oberfläche Oberfläche diffusor	
Material	Extra-helles Glas - Gehärtet
Farbe	Transparent

Oberfläche Oberfläche flansch	
Material	UV beständiges Polycarbonat
Farbe	Text white RAL9003
Bearbeitungstyp	Flüssiglackierung

Elektronik



89144
On/Off Driver 198~264V AC / 180~275V DC (1 - 2 art.)



89145
On/Off Driver 198~264V AC / 180~275V DC (3 - 6 art.)



99375
On/Off Driver 198~264V AC (6 - 12 art.)

C-E100010
1-10V - 0-10V Controller (3 - 4 art.)

C-E100011
Push and Simply Dim - DALI-2 Controller (3 - 4 art.)

Cables Electrification	
Cable connector	No connector - PVC 2x0.35mm²

Linea Light Group reserves the right, without any advance notice, to change the characteristics of their products, as well as the availability of the same at any time. No product, relative technical data, illustrations and information are binding for Linea Light Group. Linea Light Group will not be held liable for any illustration, text and/or translation\ errors. All values indicated are measured values. There is a +/- 10% tolerance for the flow, CCT and power data.

Wandleuchten | 1 x powerLED 1 W DC 350 mA | CRI 90
C00943WHMWW

Single emission wall lights for indoor application. The super warm white LED light source with a asymmetric wallwasher light distribution is composed of 1 powerled LEDs with CCT of 2700 K and a CRI 90; the source luminous flux is 124 lm, with a 124.0 lm/W nominal luminous efficacy.

The device body is made of die-cast aluminium en ab - 46100 and features a grey finish, processed by means of powder coating with thermosetting powders; the diffuser is made of extra clear glass - tempered.

The ingress protection degree is IP40; the total weight is of 0.027 kg. The power supply driver is not provided and is to be ordered separately.

The total absorbed power is 1 W The power supply cable is included and features a 0.17 m length.

The device features protection class III and can be wall lights-mounted, with a 42 x 42 mm hole (in plasterboard) with an outer casing, code 99850(for concrete or masonry).

Compliant with the EN 60598-1 standard and its specific provisions.

Energieeffizienzklasse
Dieses Produkt enthält eine Lichtquelle der Energieeffizienzklasse F.

Illuminotechnical Eigenschaften	
Light Output Ratio (LOR)	41 %
Lichtstrom (Lichtquelle)	124 lm
Leuchten Lichtstrom	52 lm
Consumption	1,0 W
Leuchten Lichtausbeute	52 lm/W
Farbtemperatur	2700 K
Standard Deviation of Colour Matching	3 Step MacAdam
Farbwiedergabeindex	90 Ra
Standardumgebungstemperatur	-20 / +50°C
Typische Temperatur am Glas	40°C

LED Life / Failure Ratio
L70 B10 C0 214455h (at Tj 65 Ta 25)
L80 B10 C0 136355h (at Tj 65 Ta 25)
L90 B10 C0 67466h (at Tj 65 Ta 25)

OPTICAL	
Optik C0/C180	73°
Light distribution simmetry	Asymmetrical

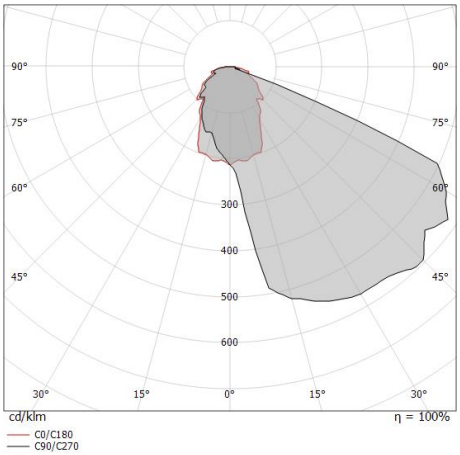

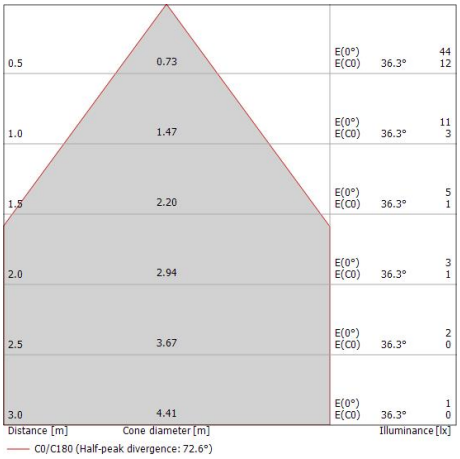

Linea Light Group reserves the right, without any advance notice, to change the characteristics of their products, as well as the availability of the same at any time. No product, relative technical data, illustrations and information are binding for Linea Light Group. Linea Light Group will not be held liable for any illustration, text and/or translation\ errors. All values indicated are measured values. There is a +/- 10% tolerance for the flow, CCT and power data.

Step | Wall Lights | Accessories
C00943WHMWW

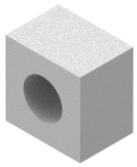

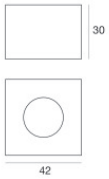

Einbaugehäuse

installationsposition: wand; typ installation: mauerwerk L=42mm, H=30mm, D=42mm.
Material:PS, farbe:Weiß.

Code

99850

Linea Light Group reserves the right, without any advance notice, to change the characteristics of their products, as well as the availability of the same at any time. No product, relative technical data, illustrations and information are binding for Linea Light Group. Linea Light Group will not be held liable for any illustration, text and/or translation\ errors. All values indicated are measured values. There is a +/- 10% tolerance for the flow, CCT and power data.