Wandleuchten - Lineare Elemente
6 x powerLEDs 12.1 W DC 630 mA | CRI 80
**C00530AMAFL**





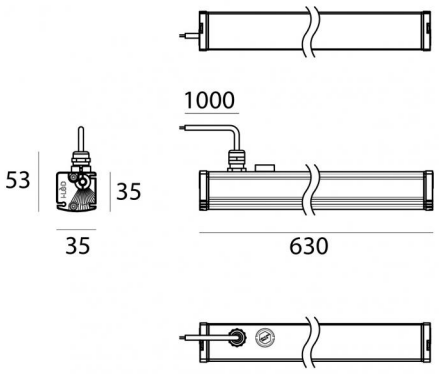


| Technische Daten | |
|---|---|
| Typ | Wandleuchten - Oberfläche |
| Installationsposition | Wand - Decke - Boden |
| Installationsumgebung | Outdoor |
| Lichtquelle | LED |
| Circuit structure | powerLEDs |
| Optik | Flood |
| Light emission direction | frontal |
| Lampe Nennleistung | 12.1 W DC |
| Lichtstrom (Lichtquelle) | 1122 lm |
| Eingangsspannungsbereich | 630mA |
| Ähnlichste Farbtemperatur / Tone | 2200 K |
| Farbwiedergabeindex | 80 Ra |
| Gleichstrom/Gleichspannung | CC |
| Isolierklasse | 3 |
| IP | IP66 |
| IK | IK07 |
| Glühdrahtprüfung | 850° |
| Direkte Montage auf normal entflammbaren Oberflächen | Ja |
| CE | Ja |
| Einschließlich Driver | Nein |
| Leuchte dimmbar | DALI - 1-10V |
| Schwenkbarkeit | Orientabile |
| Drehbarkeit | Nein |
| Begehbarkeit | Nein |
| Überrollbarkeit | Nein |
| Einschließlich Kabel | Ja |
| Kabellänge | 1 m |
| Harzbeschichtung | Nein |
| Typ Lichtabstrahlung | Einflammig |
| Nettogewicht | 0.7 Kg |
| Schutz vor elektrostatischen Entladungen | Nein |
| Schutz vor Stoßspannungen | Nein |
| Technische Merkmale des Produkts | TCS |

| Oberfläche Oberfläche Gehäuse | |
|---|---|
| Material | Aluminiumlegierung 6060 |
| Farbe | Anodised aluminium |
| Bearbeitungstyp | Anodisierung 15 µm |

| Oberfläche Oberfläche diffusor | |
|---|---|
| Material | PMMA |
| Farbe | Transparent |

**Elektronik**



99186
On/Off Driver 198~264V AC (1 - 2 art.)



C-E200002
Push and Simply Dim - DALI-2 Controller (1 art.)



C-E200008
On/Off Driver 198~264V AC / V DC (1 art.)

| Cables Electrification | |
|---|---|
| Cable connector | No |



Linea Light Group reserves the right, without any advance notice, to change the characteristics of their products, as well as the availability of the same at any time. No product, relative technical data, illustrations and information are binding for Linea Light Group. Linea Light Group will not be held liable for any illustration, text and/or translation\ errors. All values indicated are measured values. There is a +/- 10% tolerance for the flow, CCT and power data.

Wandleuchten - Lineare Elemente | 6 x powerLEDs 12.1 W DC 630 mA | CRI 80
**C00530AMAFL**

Single emission wall lights or lines for outdoor application. The ancient white LED light source is composed of 6 powerled LEDs with CCT of 2200 K and a CRI 80; the source luminous flux is 1122 lm, with a 92.7 lm/W nominal luminous efficacy.

The device body is made of aluminium alloy 6060 and features a anodised aluminium finish, processed by means of 15 µm anodizing; the diffuser is made of pmma. Surface treatment of the product body with chemical conversion of aluminum, designed to ensure maximum long?term resistance.

The ingress protection degree is IP66; the total weight is of 0.7 kg. The power supply driver is not provided and is to be ordered separately.

The total absorbed power is 12.1 W The power supply cable is included and features a 1 m length.

The device features protection class III and can be wall lights, ceiling or floor-mounted.

Compliant with the EN 60598-1 standard and its specific provisions.

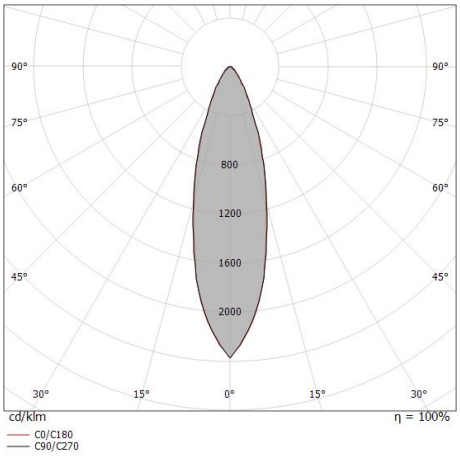


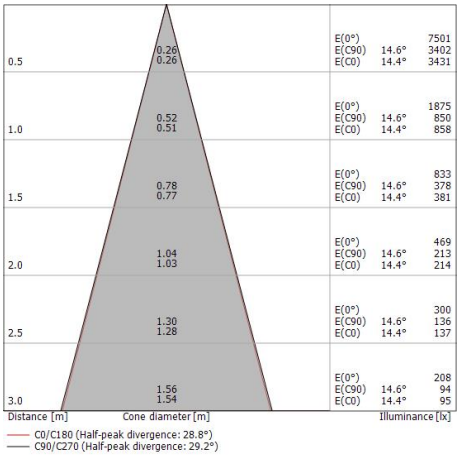


| Energieeffizienzklasse |
|---|
| Dieses Produkt enthält 2 Lichtquellen der Energieeffizienzklasse F. |

| Illuminotechnical Eigenschaften | |
|---|---|
| Light Output Ratio (LOR) | 70 % |
| Lichtstrom (Lichtquelle) | 1122 lm |
| Leuchten Lichtstrom | 790 lm |
| Consumption | 12 W |
| Leuchten Lichtausbeute | 65 lm/W |
| Farbtemperatur | 2200 K |
| Standard Deviation of Colour Matching | 1/16 ANSI BIN |
| Farbwiedergabeindex | 80 Ra |
| Standardumgebungstemperatur | -20 / +50°C |
| Typische Temperatur am Glas | 40°C |

| LED Life / Failure Ratio |
|---|
| L70 B10 C0 214455h (at Tj 65  Ta 25 ) |
| L80 B10 C0 136355h (at Tj 65  Ta 25 ) |
| L90 B10 C0 67466h (at Tj 65  Ta 25 ) |

| UGR | |
|---|---|
| UGR axial | 17.7 |
| UGR transversal | 18.1 |
| X=4H \| Y=8H | S=0.25H |
| Reflection factor | 70/50/20 |

| OPTICAL | |
|---|---|
| Optik C0/C180 | 29° |
| Light distribution simmetry | Symmetrical |



Linea Light Group reserves the right, without any advance notice, to change the characteristics of their products, as well as the availability of the same at any time. No product, relative technical data, illustrations and information are binding for Linea Light Group. Linea Light Group will not be held liable for any illustration, text and/or translation\ errors. All values indicated are measured values. There is a +/- 10% tolerance for the flow, CCT and power data.

Xenia_W | Lines | Accessories
**C00530AMAFL**




Klammer
installationsposition: wand, decke, boden L=95.6mm, H=45mm, D=28mm.
Material:Stahl AISI 304, farbe:Scotch Brite Stahl.

**Code**
89045



Klammer
installationsposition: wand, decke, boden L=155.6mm, H=45mm, D=28mm.
Material:Stahl AISI 304, farbe:Scotch Brite Stahl.

**Code**
89046



Klammer
installationsposition: wand, decke, boden L=305.6mm, H=60mm, D=28mm.
Material:Stahl AISI 304, farbe:Scotch Brite Stahl.

**Code**
89047



Klammer
installationsposition: wand, decke, boden L=35mm, H=72.8mm, D=36.5mm.
Material:Stahl AISI 304, farbe:Scotch Brite Stahl.

**Code**
98949



Blendschutz - Blendschutzblende
Blendschutzart: palpebra.
Material:Aluminiumlegierung 6060, farbe:Anodised aluminium, bearbeitungstyp :Anodisierung 20 µm.

**Code**
98783


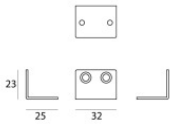


2X

Klammer
installationsposition: wand L=32mm, H=23mm, D=25mm.
Material:Stahl AISI 304, farbe:Stahl.

**Code**
C-F400008



Linea Light Group reserves the right, without any advance notice, to change the characteristics of their products, as well as the availability of the same at any time. No product, relative technical data, illustrations and information are binding for Linea Light Group. Linea Light Group will not be held liable for any illustration, text and/or translation\ errors. All values indicated are measured values. There is a +/- 10% tolerance for the flow, CCT and power data.