Downlights | 1 arrayLED 18 W DC 500 mA | CRI 90

C00408WHMWW



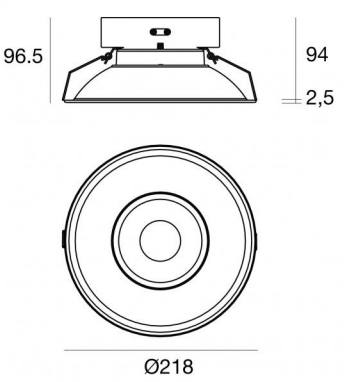

Technische Daten	
Installationsposition	Decke
Installationsumgebung	Indoor
Lichtquelle	LED
Circuit structure	arrayLED
Optik	Asymmetric Wallwasher
Light emission direction	downward
Lampe Nennleistung	18 W DC
Lichtstrom (Lichtquelle)	2834 lm
Eingangsspannungsbereich	500mA
Ähnlichste Farbtemperatur / Tone	2700 K
Farbwiedergabeindex	90 Ra
Gleichstrom/Gleichspannung	CC
Isolierklasse	3
IP	IP44
IK	IK08
Glühdrahtprüfung	850°
Direkte Montage auf normal entflammbaren Oberflächen	Ja
CE	Ja
Einschließlich Driver	Nein
Leuchte dimmbar	Nein
Schwenkbarkeit	Nein
Drehbarkeit	Nein
Begehbarkeit	Nein
Überrollbarkeit	Nein
Einschließlich Kabel	Ja
Kabellänge	0.3 m
Harzbeschichtung	Nein
Einbautiefe	94 mm
Typ Lichtabstrahlung	Einflammig
Nettogewicht	0.24 Kg
Schutz vor elektrostatischen Entladungen	Nein
Schutz vor Stoßspannungen	Nein

Oberfläche Oberfläche Gehäuse	
Material	Aluminium
Farbe	Text white RAL9003
Bearbeitungstyp	Lackierung

Elektronik



99115
1-10V - N/O button Multi Power 198~264V AC / V DC (1 art.)



99106
On/Off Driver 198~264V AC (1 art.)



C-E100001
Push and Simply Dim - DALI-2 Multi Power 198~264V AC / V DC (1 art.)

Linea Light Group reserves the right, without any advance notice, to change the characteristics of their products, as well as the availability of the same at any time. No product, relative technical data, illustrations and information are binding for Linea Light Group. Linea Light Group will not be held liable for any illustration, text and/or translation\ errors. All values indicated are measured values. There is a +/- 10% tolerance for the flow, CCT and power data.

Downlights | 1 arrayLED 18 W DC 500 mA | CRI 90
C00408WHMWW

Single emission recessed downlights for indoor application. The super warm white LED light source with a asymmetric wallwasher light distribution is composed of 1 arrayled LEDs with CCT of 2700 K and a CRI 90; the source luminous flux is 2834 lm, with a 157.4 lm/W nominal luminous efficacy.

The device body is made of aluminium and features a text white ral9003 finish, processed by means of coating.

The ingress protection degree is IP44; the total weight is of 0.24 kg. The power supply driver is not provided and is to be ordered separately.

The total absorbed power is 18 W The power supply cable is included and features a 0.3 m length.

The device features protection class III and can be ceiling-mounted, with a 197-210 mm diameter hole (in plasterboard).

Compliant with the EN 60598-1 standard and its specific provisions.

Energieeffizienzklasse
Dieses Produkt enthält eine Lichtquelle der Energieeffizienzklasse D.

Illuminotechnical Eigenschaften	
Light Output Ratio (LOR)	64 %
Lichtstrom (Lichtquelle)	2834 lm
Leuchten Lichtstrom	1817 lm
Consumption	18 W
Leuchten Lichtausbeute	100 lm/W
Farbtemperatur	2700 K
Standard Deviation of Colour Matching	2 Step MacAdam
Farbwiedergabeindex	90 Ra
Colour Rendering Index	60 R9
Black Body Locus	On
Standardumgebungstemperatur	-20 / +50°C
Typische Temperatur am Glas	40°C

LED Life / Failure Ratio
L70 B10 C0 235315h (at Tj 65 Ta 25)
L80 B10 C0 147343h (at Tj 65 Ta 25)
L90 B10 C0 69745h (at Tj 65 Ta 25)

OPTICAL	
Optik C0/C180	78°
Light distribution simmetry	Asymmetrical

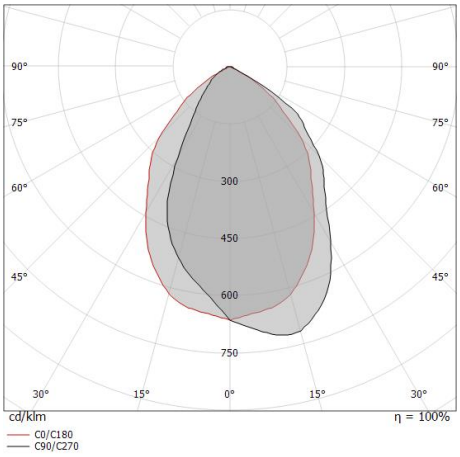

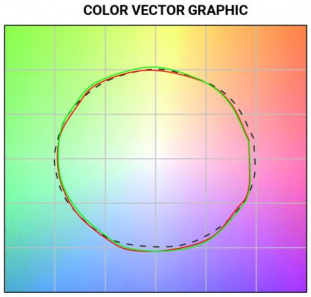

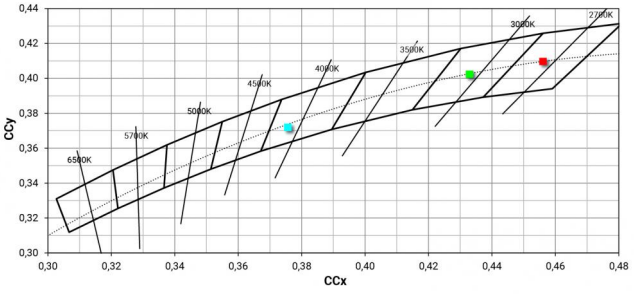

Linea Light Group reserves the right, without any advance notice, to change the characteristics of their products, as well as the availability of the same at any time. No product, relative technical data, illustrations and information are binding for Linea Light Group. Linea Light Group will not be held liable for any illustration, text and/or translation\ errors. All values indicated are measured values. There is a +/- 10% tolerance for the flow, CCT and power data.