Downlights | 1 arrayLED 8 W DC 220 mA | CRI 80

C00362SAWSP

MARINE GRADE



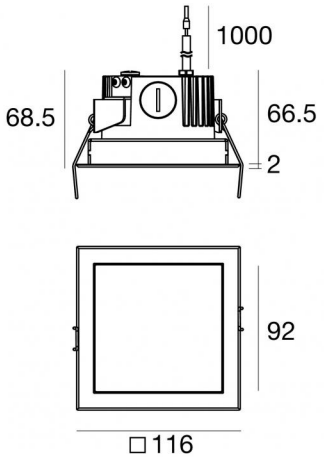

102

Technische Daten	
Installationsposition	Decke
Installationsumgebung	Outdoor
Lichtquelle	LED
Circuit structure	arrayLED
Optik	Spot
Light emission direction	downward
Lampe Nennleistung	8 W DC
Lichtstrom (Lichtquelle)	1203 lm
Eingangsspannungsbereich	220mA
Ähnlichste Farbtemperatur / Tone	3000 K
Farbwiedergabeindex	80 Ra
Gleichstrom/Gleichspannung	CC
Isolierklasse	3
IP	IP67
IK	IK10
Glühdrahtprüfung	850°
Direkte Montage auf normal entflammbaren Oberflächen	Ja
CE	Ja
Einschließlich Driver	Nein
Leuchte dimmbar	Ja
Schwenkbarkeit	Nein
Drehbarkeit	Nein
Begehbarkeit	Nein
Überrollbarkeit	Nein
Einschließlich Kabel	Ja
Kabellänge	1 m
Harzbeschichtung	Ja
Einbautiefe	66.5 mm
Typ Lichtabstrahlung	Einflammig
Nettogewicht	0.85 Kg
Schutz vor elektrostatischen Entladungen	Nein
Schutz vor Stoßspannungen	Nein
Optiktechnologie	Honey comb
Technische Merkmale des Produkts	Acquastop

Oberfläche Oberfläche Gehäuse	
Material	Stranggepresstes Aluminium EN AB - 46100
Farbe	Matt black (R9005)
Bearbeitungstyp	Offenporige Anodisierung + Pulverlackierung

Oberfläche Oberfläche diffusor	
Material	Extra-helles Glas - Gehärtet
Farbe	transparent
Bearbeitungstyp	Siebdruck

Oberfläche Oberfläche flansch	
Material	Edelstahl AISI 316
Farbe	Stahl
Bearbeitungstyp	Bürsten

Elektronik



99342
On/Off Driver 198~264V AC (1 art.)



C-E200005
Push and Simply Dim - DALI-2 Controller (1 art.)

Cables Electrification	
Cable connector	No connector - Neoprene 2x0.5mm²

Linea Light Group reserves the right, without any advance notice, to change the characteristics of their products, as well as the availability of the same at any time. No product, relative technical data, illustrations and information are binding for Linea Light Group. Linea Light Group will not be held liable for any illustration, text and/or translation\ errors. All values indicated are measured values. There is a +/- 10% tolerance for the flow, CCT and power data.

Downlights | 1 arrayLED 8 W DC 220 mA | CRI 80
C00362SAWSP

Single emission recessed downlights for outdoor application. The warm white LED light source with a spot light distribution is composed of 1 arrayled LEDs with CCT of 3000 K and a CRI 80; the source luminous flux is 1203 lm, with a 150.4 lm/W nominal luminous efficacy.

Product suitable for installations in coastal areas with high salinity and strong exposure to atmospheric agents.

The device body is made of die-cast aluminium en ab - 46100 and features a matt black (r9005) finish, processed by means of open pore anodizing + powder coating; the diffuser is made of extra clear glass - tempered with a silk-screening treatment. Surface treatment of the product body through aluminum chemical conversion, followed by polyester powder coating, using exclusively coatings compliant with the Qualicoat standard.The product flange is made of steel, a material that ensures high robustness, superior mechanical strength and extended durability, guaranteeing maximum component reliability over time.

The ingress protection degree is IP67; the total weight is of 0.85 kg. The power supply driver is not provided and is to be ordered separately.

The total absorbed power is 8 W The power supply cable is included and features a 1 m length.

The device features protection class III and can be ceiling-mounted, with a 102 x 102 mm hole (in plasterboard).

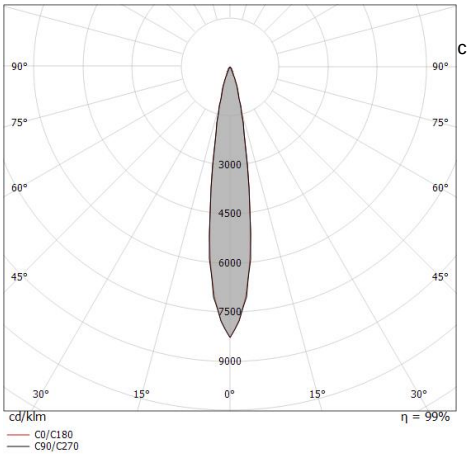

c provisions.

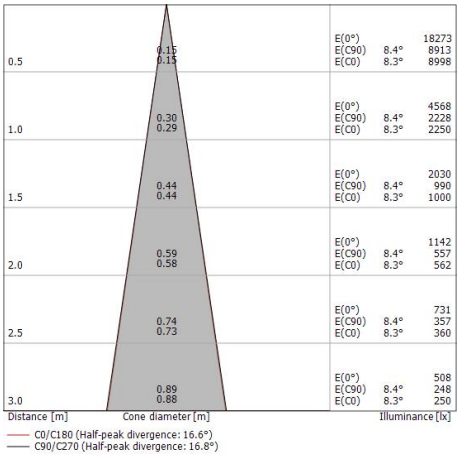

Energieeffizienzklasse
Dieses Produkt enthält eine Lichtquelle der Energieeffizienzklasse D.

Illuminotechnical Eigenschaften	
Light Output Ratio (LOR)	45 %
Lichtstrom (Lichtquelle)	1203 lm
Leuchten Lichtstrom	553 lm
Consumption	8 W
Leuchten Lichtausbeute	69 lm/W
Farbtemperatur	3000 K
Standard Deviation of Colour Matching	2 Step MacAdam
Farbwiedergabeindex	80 Ra
Standardumgebungstemperatur	-20 / +50°C
Typische Temperatur am Glas	50°C

LED Life / Failure Ratio
L70 B10 C0 231262h (at Tj 65 Ta 25)
L80 B10 C0 144799h (at Tj 65 Ta 25)
L90 B10 C0 68534h (at Tj 65 Ta 25)

UGR	
UGR axial	7.2
UGR transversal	7.1
X=4H | Y=8H	S=0.25H
Reflection factor	70/50/20

OPTICAL	
Optik C0/C180	17°
Light distribution simmetry	Symmetrical

Linea Light Group reserves the right, without any advance notice, to change the characteristics of their products, as well as the availability of the same at any time. No product, relative technical data, illustrations and information are binding for Linea Light Group. Linea Light Group will not be held liable for any illustration, text and/or translation\ errors. All values indicated are measured values. There is a +/- 10% tolerance for the flow, CCT and power data.