Unterwasserleuchten | 9 x powerLEDs 38 W DC 12 V
CRI 80
C00105SENDI

MARINE GRADE



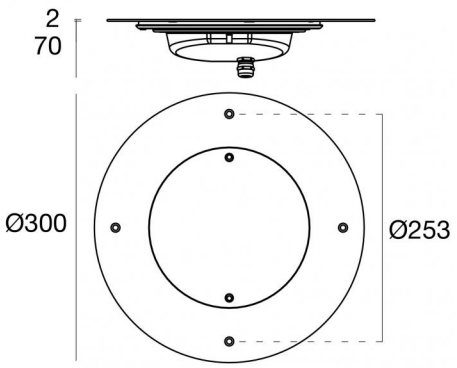

Technische Daten	
Typ	Frame
Installationsposition	Wand - Boden
Installationsumgebung	Outdoor
Lichtquelle	LED
Circuit structure	powerLEDs
Optik	Diffuses
Light emission direction	frontal
Lampe Nennleistung	38 W DC
Lichtstrom (Lichtquelle)	4921 lm
Ähnlichste Farbtemperatur / Tone	4000 K
Farbwiedergabeindex	80 Ra
Gleichstrom/Gleichspannung	CV
Isolierklasse	3
IP	IP68
Maximale Einbautiefe	25 m
Installationsbeschränkung	Nur unter Wasser
IK	IK10
Glühdrahtprüfung	850°
Direkte Montage auf normal entflammbaren Oberflächen	Ja
CE	Ja
Einschließlich Driver	Nein
Leuchte dimmbar	DALI - 1-10V
Schwenkbarkeit	Nein
Drehbarkeit	Nein
Begehbarkeit	Nein
Überrollbarkeit	Nein
Einschließlich Kabel	Ja
Kabellänge	20 m
Harzbeschichtung	Ja
Einbautiefe	70 mm
Typ Lichtabstrahlung	Einflammig
Nettogewicht	4.04 Kg
Schutz vor elektrostatischen Entladungen	Nein
Schutz vor Stoßspannungen	Nein
Technische Merkmale des Produkts	Acquastop

Oberfläche Oberfläche Gehäuse	
Material	Edelstahl AISI 316
Farbe	Stahl

Oberfläche Oberfläche diffusor	
Bearbeitungstyp	Siebdruck

Oberfläche Oberfläche flansch	
Material	Edelstahl AISI 316
Farbe	Stahl

Elektronik



83010
On/Off Driver 90~264V AC / V DC (1 art.)



83015
DALI Controller 90~305V AC / V DC (1 - 2 art.)



83013
On/Off Driver 180~305V AC / 254~431V DC 120 W (1 - 3 art.)



83012
DALI Controller 90~305V AC / V DC (1 art.)

Linea Light Group reserves the right, without any advance notice, to change the characteristics of their products, as well as the availability of the same at any time. No product, relative technical data, illustrations and information are binding for Linea Light Group. Linea Light Group will not be held liable for any illustration, text and/or translation\ errors. All values indicated are measured values. There is a +/- 10% tolerance for the flow, CCT and power data.

Unterwasserleuchten | 9 x powerLEDs 38 W DC 12 V | CRI 80
C00105SENDI

Single emission submerged for outdoor application. The natural white LED light source with a diffused light distribution is composed of 9 powerled LEDs with CCT of 4000 K and a CRI 80; the source luminous flux is 4921 lm, with a 129.5 lm/W nominal luminous efficacy.

Product suitable for installations in coastal areas with high salinity and strong exposure to atmospheric agents.

The device body is made of aisi 316 stainless steel and features a steel finish; the diffuser is made with a silk-screening treatment. The robust steel structure enhances the fixture’s design and ensures long?lasting performance, even in the most demanding environments.The product flange is made of steel, a material that ensures high robustness, superior mechanical strength and extended durability, guaranteeing maximum component reliability over time.

The ingress protection degree is IP68; the total weight is of 4.04 kg. The power supply driver is not provided and is to be ordered separately.

The total absorbed power is 38 W The power supply cable is included and features a 20 m length.

The device features protection class III and can be wall lights or floor-mounted with an outer casing, code 84939(for concrete or masonry).

Compliant with the EN 60598-1 standard and its specific provisions.

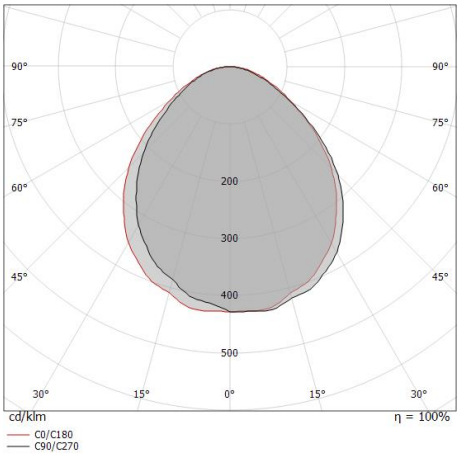

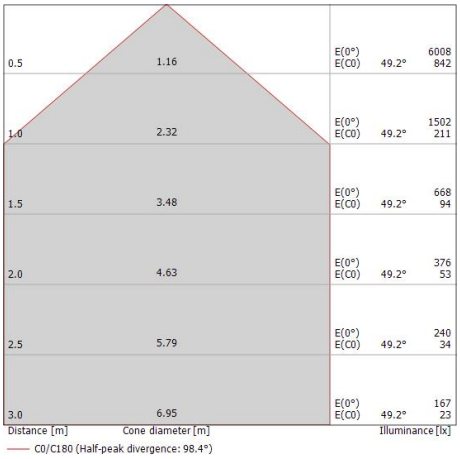

Energieeffizienzklasse
Dieses Produkt enthält 3 Lichtquellen der Energieeffizienzklasse E.

Illuminotechnical Eigenschaften	
Light Output Ratio (LOR)	71 %
Lichtstrom (Lichtquelle)	4921 lm
Leuchten Lichtstrom	3512 lm
Consumption	38 W
Leuchten Lichtausbeute	92 lm/W
Farbtemperatur	4000 K
Standard Deviation of Colour Matching	3 Step MacAdam
Farbwiedergabeindex	80 Ra
Standardumgebungstemperatur	-20 / +50°C
Typische Temperatur am Glas	40°C

LED Life / Failure Ratio
L70 B10 C0 363000h (at Tj 65 Ta 25)
L80 B10 C0 237566h (at Tj 65 Ta 25)
L90 B10 C0 151000h (at Tj 65 Ta 25)

OPTICAL	
Optik C0/C180	98°
Light distribution simmetry	Asymmetrical

Linea Light Group reserves the right, without any advance notice, to change the characteristics of their products, as well as the availability of the same at any time. No product, relative technical data, illustrations and information are binding for Linea Light Group. Linea Light Group will not be held liable for any illustration, text and/or translation\ errors. All values indicated are measured values. There is a +/- 10% tolerance for the flow, CCT and power data.

MK68_RF | Submerged | Accessories

C00105SENDI



Einbaugehäuse

L=135mm, H=283mm, D=283mm

Code

84939

Linea Light Group reserves the right, without any advance notice, to change the characteristics of their products, as well as the availability of the same at any time. No product, relative technical data, illustrations and information are binding for Linea Light Group. Linea Light Group will not be held liable for any illustration, text and/or translation\ errors. All values indicated are measured values. There is a +/- 10% tolerance for the flow, CCT and power data.