Downlights | 1 arrayLED 8 W DC 220 mA | CRI 92
**97925W15**

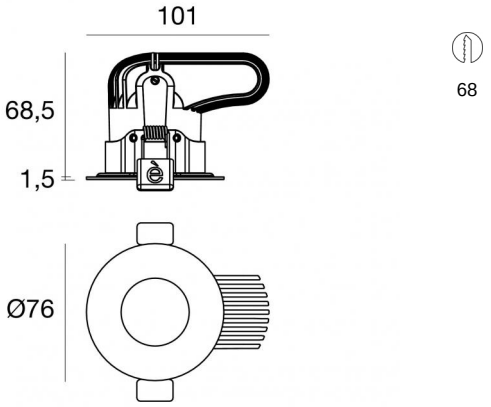


| Technische Daten | |
|---|---|
| Installationsposition | Decke |
| Installationsumgebung | Indoor |
| Lichtquelle | LED |
| Circuit structure | arrayLED |
| Optik | Spot |
| Light emission direction | downward |
| Lampe Nennleistung | 8 W DC |
| Lichtstrom (Lichtquelle) | 943 lm |
| Eingangsspannungsbereich | 220mA |
| Ähnlichste Farbtemperatur / Tone | 3000 K |
| Farbwiedergabeindex | 92 Ra |
| Gleichstrom/Gleichspannung | CC |
| Isolierklasse | 3 |
| IP | IP44 |
| IP optisches System | IP65 |
| IK | IK08 |
| Glühdrahtprüfung | 850° |
| Direkte Montage auf normal entflammbaren Oberflächen | Ja |
| CE | Ja |
| Einschließlich Driver | Nein |
| Leuchte dimmbar | DALI - 1-10V |
| Schwenkbarkeit | Nein |
| Drehbarkeit | Nein |
| Begehbarkeit | Nein |
| Überrollbarkeit | Nein |
| Einschließlich Kabel | Ja |
| Kabellänge | 0.300 m |
| Harzbeschichtung | Nein |
| Einbautiefe | 68,5 mm |
| Typ Lichtabstrahlung | Einflammig |
| Nettogewicht | 0.26 Kg |
| Schutz vor elektrostatischen Entladungen | Nein |
| Schutz vor Stoßspannungen | Nein |

| Oberfläche Oberfläche Gehäuse | |
|---|---|
| Material | Stranggepresstes Aluminium EN AB - 46100 |
| Farbe | Polished (galvanic) gold |
| Bearbeitungstyp | Pulverbeschichtung mit duroplastischen Pulvern |

| Oberfläche Oberfläche diffusor | |
|---|---|
| Material | UV beständiges Polycarbonat |
| Farbe | Transparent |

| Oberfläche Oberfläche strahler | |
|---|---|
| Material | Stranggepresstes Aluminium EN AB - 46100 |
| Farbe | Aluminium |
| Bearbeitungstyp | Polieren |

**Elektronik**

99198
On/Off Driver 198~264V AC (1 art.)

99732
1-10V Multi Power 198~264V AC / V DC (1 art.)

99730
DALI - Push and Simply Dim Multi Power 198~264V AC / 180~275V DC (1 art.)

83231
DALI-2 Multi Power 198~264V AC / 176~280V DC (1 art.)

| Cables Electrification | |
|---|---|
| Cable connector | FEMALE JST SMR-02V-BC |
| Cable connector | MALE JST SMR-02V-B |



Linea Light Group reserves the right, without any advance notice, to change the characteristics of their products, as well as the availability of the same at any time. No product, relative technical data, illustrations and information are binding for Linea Light Group. Linea Light Group will not be held liable for any illustration, text and/or translation\ errors. All values indicated are measured values. There is a +/- 10% tolerance for the flow, CCT and power data.

Downlights | 1 arrayLED 8 W DC 220 mA | CRI 92
**97925W15**

Single emission recessed downlights for indoor application. The warm white LED light source with a spot light distribution is composed of 1 arrayled LEDs with CCT of 3000 K and a CRI 92; the source luminous flux is 943 lm, with a 117.9 lm/W nominal luminous efficacy.

The device body is made of die-cast aluminium en ab - 46100 and features a polished (galvanic) gold finish, processed by means of powder coating with thermosetting powders; the diffuser is made of uv resistant polycarbonate.

The ingress protection degree is IP44; the total weight is of 0.26 kg. The power supply driver is not provided and is to be ordered separately.

The total absorbed power is 8 W The power supply cable is included and features a 0.300 m length.

The device features protection class III and can be ceiling-mounted, with a 68 mm diameter hole (in plasterboard).

Compliant with the EN 60598-1 standard and its specific provisions.

| Energieeffizienzklasse |
|---|
| Dieses Produkt enthält eine Lichtquelle der Energieeffizienzklasse F. |

| Illuminotechnical Eigenschaften | |
|---|---|
| Light Output Ratio (LOR) | 71 % |
| Lichtstrom (Lichtquelle) | 943 lm |
| Leuchten Lichtstrom | 674 lm |
| Consumption | 8 W |
| Leuchten Lichtausbeute | 84 lm/W |
| Farbtemperatur | 3000 K |
| Standard Deviation of Colour Matching | 2 Step MacAdam |
| Farbwiedergabeindex | 92 Ra |
| Gamut Area Index | 59 GAI |
| Colour Rendering Index | 56 R9 |
| IES TM-30 Rf | 91 |
| IES TM-30 Rg | 100 |
| Black Body Locus | On |
| Standardumgebungstemperatur | -20 / +50°C |
| Typische Temperatur am Glas | 40°C |

| LED Life / Failure Ratio |
|---|
| L70 B10 C0 296960h (at Tj 65 Ta 25 ) |

| UGR | |
|---|---|
| UGR axial | 14.4 |
| UGR transversal | 14.3 |
| X=4H \| Y=8H | S=0.25H |
| Reflection factor | 70/50/20 |

| OPTICAL | |
|---|---|
| Optik C0/C180 | 17° |
| Light distribution simmetry | Symmetrical |

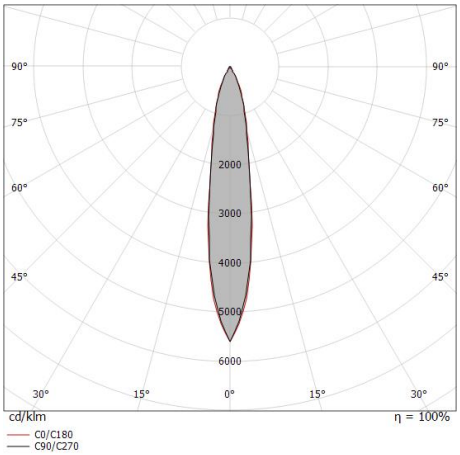


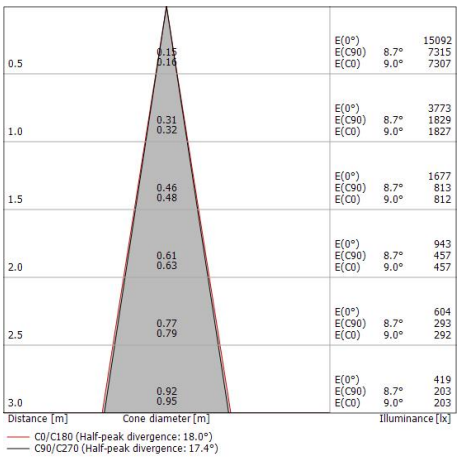


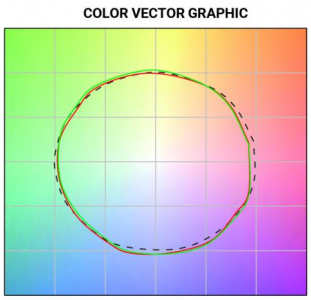


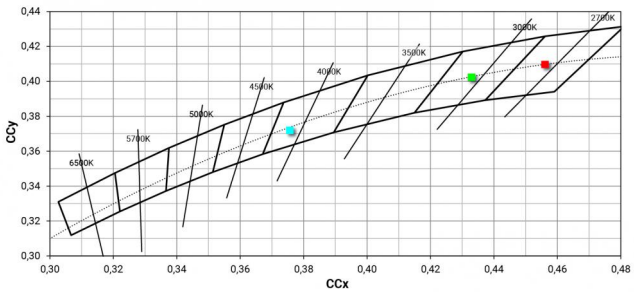




Linea Light Group reserves the right, without any advance notice, to change the characteristics of their products, as well as the availability of the same at any time. No product, relative technical data, illustrations and information are binding for Linea Light Group. Linea Light Group will not be held liable for any illustration, text and/or translation\ errors. All values indicated are measured values. There is a +/- 10% tolerance for the flow, CCT and power data.