Pendelleuchte | 90-264 V
topLED 37 W DC - 40.5 W AC | CRI 80
97814C12



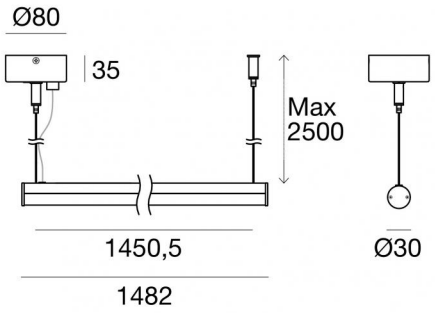

Technische Daten	
Typ	Oberfläche
Installationsposition	Decke
Installationsumgebung	Indoor
Lichtquelle	LED
Circuit structure	topLED
Optik	Extra Wide Flood
Light emission direction	external
Lampe Nennleistung	37 W DC
Gesamtleistung	40.5 W
Lichtstrom (Lichtquelle)	5198 lm
Nominale Eingangsspannung	220 - 240 V AC
Eingangsspannungsbereich	90 - 264 V AC
Frequency	50 - 60 Hz
Ähnlichste Farbtemperatur / Tone	6500 K
Farbwiedergabeindex	80 Ra
Gleichstrom/Gleichspannung	AC
Isolierklasse	1
IP	IP40
IK	IK08
Glühdrahtprüfung	850°
Direkte Montage auf normal entflammbaren Oberflächen	Ja
CE	Ja
Einschließlich Driver	Driver
Leuchte dimmbar	Nein
Schwenkbarkeit	Nein
Drehbarkeit	Nein
Begehbarkeit	Nein
Überrollbarkeit	Nein
Einschließlich Kabel	Ja
Kabellänge	2.5 m
Harzbeschichtung	Nein
Typ Lichtabstrahlung	Einflammig
Nettogewicht	1.06 Kg
Schutz vor elektrostatischen Entladungen	30 KV
Schutz vor Stoßspannungen	Nein

Oberfläche Oberfläche Gehäuse	
Material	Aluminium
Farbe	Anodised aluminium
Bearbeitungstyp	Eloxierung

Oberfläche Oberfläche diffusor	
Material	UV beständiges Polycarbonat
Farbe	Gekräuselt

Cables Electrification+suspension	
Max. Kabellänge	2500 mm

Linea Light Group reserves the right, without any advance notice, to change the characteristics of their products, as well as the availability of the same at any time. No product, relative technical data, illustrations and information are binding for Linea Light Group. Linea Light Group will not be held liable for any illustration, text and/or translation\ errors. All values indicated are measured values. There is a +/- 10% tolerance for the flow, CCT and power data.

Pendelleuchte | 90-264 V | topLED 37 W DC - 40.5 W AC | CRI 80
97814C12

Single emission pendant luminaires for indoor application. The cold white LED light source with a extra wide flood light distribution is composed of 144 topled LEDs with CCT of 6500 K and a CRI 80; the source luminous flux is 5198 lm, with a 140.5 lm/W nominal luminous efficacy.

The device body is made of aluminium and features a anodised aluminium finish, processed by means of anodisation; the diffuser is made of uv resistant polycarbonate. Surface treatment of the product body with chemical conversion of aluminum, designed to ensure maximum long?term resistance.

The ingress protection degree is IP40; the total weight is of 1.06 kg.

The total absorbed power is 40.5 W The power supply cable is included and features a 2.5 m length.

The device features protection class I and can be ceiling-mounted.

Compliant with the EN 60598-1 standard and its specific provisions.

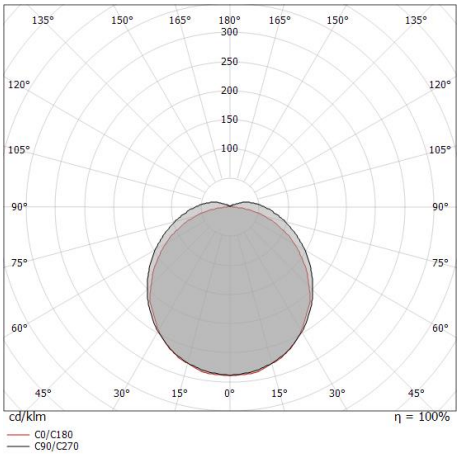

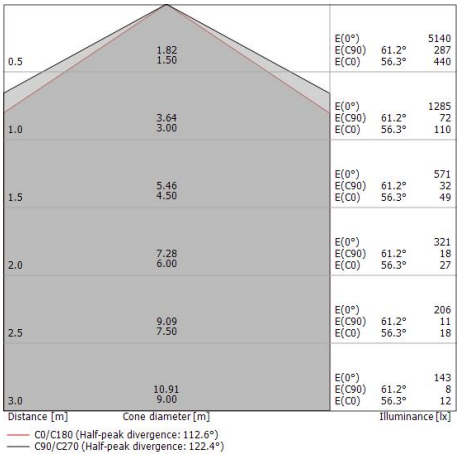

Energieeffizienzklasse
Dieses Produkt enthält 4 Lichtquellen der Energieeffizienzklasse D.

Illuminotechnical Eigenschaften	
Light Output Ratio (LOR)	85 %
Lichtstrom (Lichtquelle)	5198 lm
Leuchten Lichtstrom	4453 lm
Consumption	40.5 W
Leuchten Lichtausbeute	109 lm/W
Farbtemperatur	6500 K
Standard Deviation of Colour Matching	3 Step MacAdam
Farbwiedergabeindex	80 Ra
Standardumgebungstemperatur	-20 / +50°C
Typische Temperatur am Glas	35°C

LED Life / Failure Ratio
L70 B10 C0 145600h (at Tj 65 Ta 25)
L80 B10 C0 92440h (at Tj 65 Ta 25)
L90 B10 C0 45500h (at Tj 65 Ta 25)

UGR	
UGR axial	30.7
UGR transversal	28
X=4H | Y=8H	S=0.25H
Reflection factor	70/50/20

OPTICAL	
Optik C90/C270	122°
Optik C0/C180	113°
Light distribution simmetry	Symmetrical 2 assis

Linea Light Group reserves the right, without any advance notice, to change the characteristics of their products, as well as the availability of the same at any time. No product, relative technical data, illustrations and information are binding for Linea Light Group. Linea Light Group will not be held liable for any illustration, text and/or translation\ errors. All values indicated are measured values. There is a +/- 10% tolerance for the flow, CCT and power data.