# Beret_X Anti-glaring

Uplights | 1 x powerLED 1 W DC 350 mA | CRI 80
**97801W15**

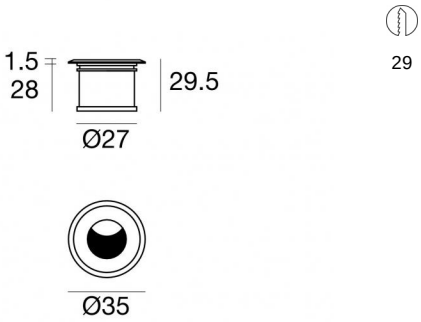


| Technische Daten | |
|---|---|
| Typ | Frame |
| Installationsposition | Boden |
| Installationsumgebung | Outdoor |
| Lichtquelle | LED |
| Circuit structure | powerLED |
| Optik | Spot |
| Light emission direction | upward |
| Lampe Nennleistung | 1 W DC |
| Lichtstrom (Lichtquelle) | 154 lm |
| Eingangsspannungsbereich | 350mA |
| Ähnlichste Farbtemperatur / Tone | 3000 K |
| Farbwiedergabeindex | 80 Ra |
| Gleichstrom/Gleichspannung | CC |
| Isolierklasse | 3 |
| IP | IP66 |
| IK | IK08 |
| Glühdrahtprüfung | 850° |
| Direkte Montage auf normal entflammbaren Oberflächen | Ja |
| CE | Ja |
| Einschließlich Driver | Nein |
| Leuchte dimmbar | Ja |
| Schwenkbarkeit | Nein |
| Drehbarkeit | Nein |
| Begehbarkeit | Ja |
| Überrollbarkeit | Nein |
| Einschließlich Kabel | Ja |
| Kabellänge | 1 m |
| Harzbeschichtung | Ja |
| Einbautiefe | 28 mm |
| Typ Lichtabstrahlung | Einflammig |
| Nettogewicht | 0.062 Kg |
| Schutz vor elektrostatischen Entladungen | Nein |
| Schutz vor Stoßspannungen | Nein |
| Optiktechnologie | Anti - Glare |
| Technische Merkmale des Produkts | TVS |

| Oberfläche Oberfläche Gehäuse | |
|---|---|
| Material | Messing OT58 |
| Farbe | Text brilliant grey RAL 9006 |
| Bearbeitungstyp | Pulverbeschichtung mit duroplastischen Pulvern |

| Oberfläche Oberfläche diffusor | |
|---|---|
| Material | Extra-helles Glas - Gehärtet |
| Farbe | transparent |
| Bearbeitungstyp | Siebdruck |

**Elektronik**

89421
On/Off Driver 198~264V AC / 176~275V DC (3 - 6 art.)

89419
On/Off Driver 198~264V AC / 176~275V DC (1 - 2 art.)

C-E200004
Push and Simply Dim - DALI-2 Controller (5 - 12 art.)

C-E200006
On/Off Driver 198~264V AC / V DC (6 - 12 art.)

| Cables Electrification | |
|---|---|
| Cable connector | No connector - Neoprene 2x0.5mm² |



Linea Light Group reserves the right, without any advance notice, to change the characteristics of their products, as well as the availability of the same at any time. No product, relative technical data, illustrations and information are binding for Linea Light Group. Linea Light Group will not be held liable for any illustration, text and/or translation\ errors. All values indicated are measured values. There is a +/- 10% tolerance for the flow, CCT and power data.

# Beret_X Anti-glaring

Uplights | 1 x powerLED 1 W DC 350 mA | CRI 80
**97801W15**

Single emission uplights for outdoor application. The warm white LED light source with a spot light distribution is composed of 1 powerled LEDs with CCT of 3000 K and a CRI 80; the source luminous flux is 154 lm, with a 154.0 lm/W nominal luminous efficacy.

The device body is made of brass ot58 and features a text brilliant grey ral 9006 finish, processed by means of powder coating with thermosetting powders; the diffuser is made of extra clear glass - tempered with a silk-screening treatment.

The ingress protection degree is IP66; the total weight is of 0.062 kg. The power supply driver is not provided and is to be ordered separately.

The total absorbed power is 1 W The power supply cable is included and features a 1 m length.

The device features protection class III and can be floor-mounted, with a 29 mm diameter hole (in plasterboard) with an outer casing, code 84915(for concrete or masonry).

Compliant with the EN 60598-1 standard and its specific provisions.

| Energieeffizienzklasse |
|---|
| Dieses Produkt enthält eine Lichtquelle der Energieeffizienzklasse D. |

| Illuminotechnical Eigenschaften | |
|---|---|
| Light Output Ratio (LOR) | 18 % |
| Lichtstrom (Lichtquelle) | 154 lm |
| Leuchten Lichtstrom | 28 lm |
| Consumption | 1,0 W |
| Leuchten Lichtausbeute | 28 lm/W |
| Farbtemperatur | 3000 K |
| Standard Deviation of Colour Matching | 1.5 Step |
| Farbwiedergabeindex | 80 Ra |
| Standardumgebungstemperatur | -20 / +50°C |
| Typische Temperatur am Glas | 40°C |

| LED Life / Failure Ratio |
|---|
| L70 B10 C0 1240219h (at Tj 65 Ta 25 ) |
| L80 B10 C0 745627h (at Tj 65 Ta 25 ) |
| L90 B10 C0 309367h (at Tj 65 Ta 25 ) |

| OPTICAL | |
|---|---|
| Optik C0/C180 | 22° |
| Light distribution simmetry | Asymmetrical |

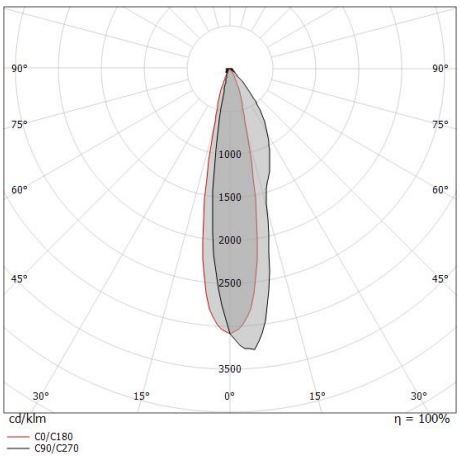


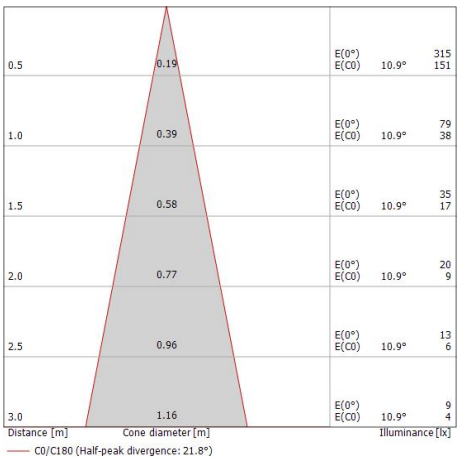




Linea Light Group reserves the right, without any advance notice, to change the characteristics of their products, as well as the availability of the same at any time. No product, relative technical data, illustrations and information are binding for Linea Light Group. Linea Light Group will not be held liable for any illustration, text and/or translation\ errors. All values indicated are measured values. There is a +/- 10% tolerance for the flow, CCT and power data.

Beret_X Anti-glaring | Uplights | Accessories
**97801W15**

Einbaugehäuse
installationsposition: wand; typ installation: mauerwerk L=49mm, H=60mm, D=60mm.
Material:Kunststoff ABS, farbe:Black.

**Code**
84915

Einbaugehäuse
installationsposition: decke; typ installation: mauerwerk L=42mm, H=35mm, D=35mm.
Material:Kunststoff ABS, farbe:Black.

**Code**
84336



Linea Light Group reserves the right, without any advance notice, to change the characteristics of their products, as well as the availability of the same at any time. No product, relative technical data, illustrations and information are binding for Linea Light Group. Linea Light Group will not be held liable for any illustration, text and/or translation\ errors. All values indicated are measured values. There is a +/- 10% tolerance for the flow, CCT and power data.