Beret_X Anti-glaring

Uplights | 1 x powerLED 1 W DC 350 mA | CRI 80
97799N30

MARINE GRADE

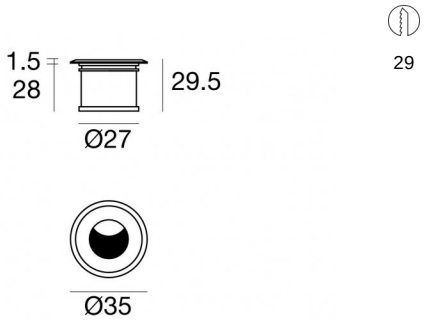

Technische Daten	
Typ	Frame
Installationsposition	Boden
Installationsumgebung	Outdoor
Lichtquelle	LED
Circuit structure	powerLED
Optik	Flood
Light emission direction	upward
Lampe Nennleistung	1 W DC
Lichtstrom (Lichtquelle)	165 lm
Eingangsspannungsbereich	350mA
Ähnlichste Farbtemperatur / Tone	4000 K
Farbwiedergabeindex	80 Ra
Gleichstrom/Gleichspannung	CC
Isolierklasse	3
IP	IP66
IK	IK08
Glühdrahtprüfung	850°
Direkte Montage auf normal entflammbaren Oberflächen	Ja
CE	Ja
Einschließlich Driver	Nein
Leuchte dimmbar	Ja
Schwenkbarkeit	Nein
Drehbarkeit	Nein
Begehbarkeit	Ja
Überrollbarkeit	Nein
Einschließlich Kabel	Ja
Kabellänge	1 m
Harzbeschichtung	Ja
Einbautiefe	28 mm
Typ Lichtabstrahlung	Einflammig
Nettogewicht	0.062 Kg
Schutz vor elektrostatischen Entladungen	Nein
Schutz vor Stoßspannungen	Nein
Optiktechnologie	Anti - Glare
Technische Merkmale des Produkts	TVS

Oberfläche Oberfläche Gehäuse	
Material	Edelstahl AISI 316L
Farbe	Stahl
Bearbeitungstyp	Kugelstrahlen

Oberfläche Oberfläche diffusor	
Material	Extra-helles Glas - Gehärtet
Farbe	transparent
Bearbeitungstyp	Siebdruck

Elektronik

89421
On/Off Driver 198~264V AC / 176~275V DC (3 - 6 art.)

89419
On/Off Driver 198~264V AC / 176~275V DC (1 - 2 art.)

C-E200004
Push and Simply Dim - DALI-2 Controller (5 - 12 art.)

C-E200006
On/Off Driver 198~264V AC / V DC (6 - 12 art.)

Cables Electrification	
Cable connector	No connector - Neoprene 2x0.5mm²

Linea Light Group reserves the right, without any advance notice, to change the characteristics of their products, as well as the availability of the same at any time. No product, relative technical data, illustrations and information are binding for Linea Light Group. Linea Light Group will not be held liable for any illustration, text and/or translation\ errors. All values indicated are measured values. There is a +/- 10% tolerance for the flow, CCT and power data.

Beret_X Anti-glaring

Uplights | 1 x powerLED 1 W DC 350 mA | CRI 80
97799N30

Single emission uplights for outdoor application. The natural white LED light source with a flood light distribution is composed of 1 powerled LEDs with CCT of 4000 K and a CRI 80; the source luminous flux is 165 lm, with a 165.0 lm/W nominal luminous efficacy.

Product suitable for installations in coastal areas with high salinity and strong exposure to atmospheric agents.

The device body is made of aisi 316l stainless steel and features a steel finish, processed by means of shot peening; the diffuser is made of extra clear glass - tempered with a silk-screening treatment. The robust steel structure enhances the fixture's design and ensures long?lasting performance, even in the most demanding environments.

The ingress protection degree is IP66; the total weight is of 0.062 kg. The power supply driver is not provided and is to be ordered separately.

The total absorbed power is 1 W The power supply cable is included and features a 1 m length.

The device features protection class III and can be floor-mounted, with a 29 mm diameter hole (in plasterboard) with an outer casing, code 84915(for concrete or masonry).

Compliant with the EN 60598-1 standard and its specific provisions.

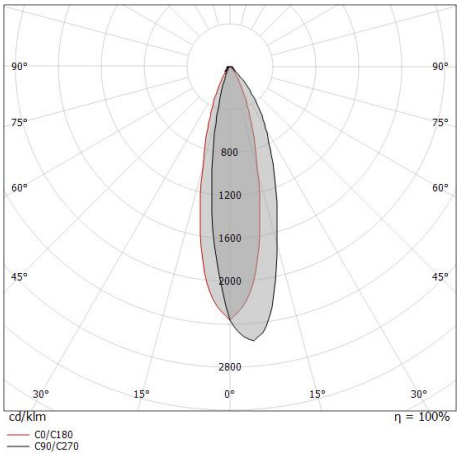

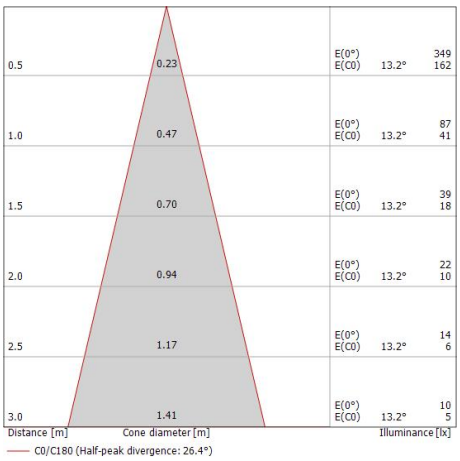

Energieeffizienzklasse
Dieses Produkt enthält eine Lichtquelle der Energieeffizienzklasse D.

Illuminotechnical Eigenschaften	
Light Output Ratio (LOR)	24 %
Lichtstrom (Lichtquelle)	165 lm
Leuchten Lichtstrom	40 lm
Consumption	1,0 W
Leuchten Lichtausbeute	40 lm/W
Farbtemperatur	4000 K
Standard Deviation of Colour Matching	1.5 Step
Farbwiedergabeindex	80 Ra
Standardumgebungstemperatur	-20 / +50°C
Typische Temperatur am Glas	40°C

LED Life / Failure Ratio
L70 B10 C0 1240219h (at Tj 65 Ta 25)
L80 B10 C0 745627h (at Tj 65 Ta 25)
L90 B10 C0 309367h (at Tj 65 Ta 25)

OPTICAL	
Optik C0/C180	26°
Light distribution simmetry	Asymmetrical

Linea Light Group reserves the right, without any advance notice, to change the characteristics of their products, as well as the availability of the same at any time. No product, relative technical data, illustrations and information are binding for Linea Light Group. Linea Light Group will not be held liable for any illustration, text and/or translation\ errors. All values indicated are measured values. There is a +/- 10% tolerance for the flow, CCT and power data.

Beret_X Anti-glaring | Uplights | Accessories
97799N30

Einbaugehäuse
installationsposition: wand; typ installation: mauerwerk L=49mm, H=60mm, D=60mm.
Material:Kunststoff ABS, farbe:Black.

Code
84915

Einbaugehäuse
installationsposition: decke; typ installation: mauerwerk L=42mm, H=35mm, D=35mm.
Material:Kunststoff ABS, farbe:Black.

Code
84336

Linea Light Group reserves the right, without any advance notice, to change the characteristics of their products, as well as the availability of the same at any time. No product, relative technical data, illustrations and information are binding for Linea Light Group. Linea Light Group will not be held liable for any illustration, text and/or translation\ errors. All values indicated are measured values. There is a +/- 10% tolerance for the flow, CCT and power data.