# Beret_X Anti-glaring

Uplights | 1 x powerLED 1 W DC 350 mA | CRI 80
**97799N15**

MARINE GRADE

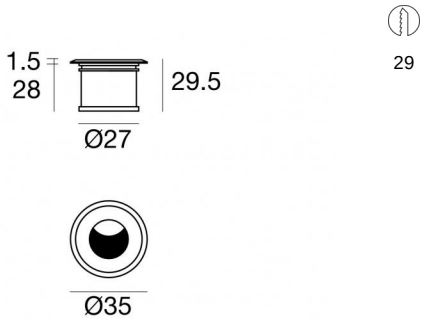


| Technische Daten | |
|---|---|
| Typ | Frame |
| Installationsposition | Boden |
| Installationsumgebung | Outdoor |
| Lichtquelle | LED |
| Circuit structure | powerLED |
| Optik | Spot |
| Light emission direction | upward |
| Lampe Nennleistung | 1 W DC |
| Lichtstrom (Lichtquelle) | 165 lm |
| Eingangsspannungsbereich | 350mA |
| Ähnlichste Farbtemperatur / Tone | 4000 K |
| Farbwiedergabeindex | 80 Ra |
| Gleichstrom/Gleichspannung | CC |
| Isolierklasse | 3 |
| IP | IP66 |
| IK | IK08 |
| Glühdrahtprüfung | 850° |
| Direkte Montage auf normal entflammbaren Oberflächen | Ja |
| CE | Ja |
| Einschließlich Driver | Nein |
| Leuchte dimmbar | Ja |
| Schwenkbarkeit | Nein |
| Drehbarkeit | Nein |
| Begehbarkeit | Ja |
| Überrollbarkeit | Nein |
| Einschließlich Kabel | Ja |
| Kabellänge | 1 m |
| Harzbeschichtung | Ja |
| Einbautiefe | 28 mm |
| Typ Lichtabstrahlung | Einflammig |
| Nettogewicht | 0.062 Kg |
| Schutz vor elektrostatischen Entladungen | Nein |
| Schutz vor Stoßspannungen | Nein |
| Optiktechnologie | Anti - Glare |
| Technische Merkmale des Produkts | TVS |

| Oberfläche Oberfläche Gehäuse | |
|---|---|
| Material | Edelstahl AISI 316L |
| Farbe | Stahl |
| Bearbeitungstyp | Kugelstrahlen |

| Oberfläche Oberfläche diffusor | |
|---|---|
| Material | Extra-helles Glas - Gehärtet |
| Farbe | transparent |
| Bearbeitungstyp | Siebdruck |

**Elektronik**

89421
On/Off Driver 198~264V AC / 176~275V DC (3 - 6 art.)

89419
On/Off Driver 198~264V AC / 176~275V DC (1 - 2 art.)

C-E200004
Push and Simply Dim - DALI-2 Controller (5 - 12 art.)

C-E200006
On/Off Driver 198~264V AC / V DC (6 - 12 art.)

| Cables Electrification | |
|---|---|
| Cable connector | No connector - Neoprene 2x0.5mm² |



Linea Light Group reserves the right, without any advance notice, to change the characteristics of their products, as well as the availability of the same at any time. No product, relative technical data, illustrations and information are binding for Linea Light Group. Linea Light Group will not be held liable for any illustration, text and/or translation\ errors. All values indicated are measured values. There is a +/- 10% tolerance for the flow, CCT and power data.

Uplights | 1 x powerLED 1 W DC 350 mA | CRI 80
**97799N15**

Single emission uplights for outdoor application. The natural white LED light source with a spot light distribution is composed of 1 powerled LEDs with CCT of 4000 K and a CRI 80; the source luminous flux is 165 lm, with a 165.0 lm/W nominal luminous efficacy.

Product suitable for installations in coastal areas with high salinity and strong exposure to atmospheric agents.

The device body is made of aisi 316l stainless steel and features a steel finish, processed by means of shot peening; the diffuser is made of extra clear glass - tempered with a silk-screening treatment. The robust steel structure enhances the fixture's design and ensures long?lasting performance, even in the most demanding environments.

The ingress protection degree is IP66; the total weight is of 0.062 kg. The power supply driver is not provided and is to be ordered separately.

The total absorbed power is 1 W The power supply cable is included and features a 1 m length.

The device features protection class III and can be floor-mounted, with a 29 mm diameter hole (in plasterboard) with an outer casing, code 84915(for concrete or masonry).

Compliant with the EN 60598-1 standard and its specific provisions.

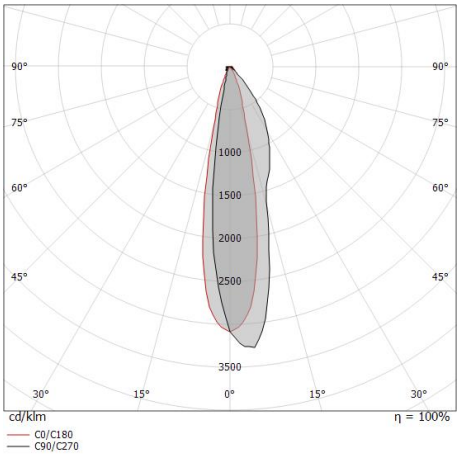


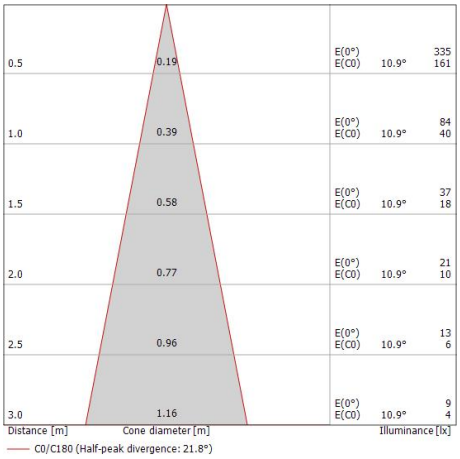


| Energieeffizienzklasse |
|---|
| Dieses Produkt enthält eine Lichtquelle der Energieeffizienzklasse D. |

| Illuminotechnical Eigenschaften | |
|---|---|
| Light Output Ratio (LOR) | 18 % |
| Lichtstrom (Lichtquelle) | 165 lm |
| Leuchten Lichtstrom | 30 lm |
| Consumption | 1,0 W |
| Leuchten Lichtausbeute | 30 lm/W |
| Farbtemperatur | 4000 K |
| Standard Deviation of Colour Matching | 1.5 Step |
| Farbwiedergabeindex | 80 Ra |
| Standardumgebungstemperatur | -20 / +50°C |
| Typische Temperatur am Glas | 40°C |

| LED Life / Failure Ratio |
|---|
| L70 B10 C0 1240219h (at Tj 65 Ta 25 ) |
| L80 B10 C0 745627h (at Tj 65 Ta 25 ) |
| L90 B10 C0 309367h (at Tj 65 Ta 25 ) |

| OPTICAL | |
|---|---|
| Optik C0/C180 | 22° |
| Light distribution simmetry | Asymmetrical |



Linea Light Group reserves the right, without any advance notice, to change the characteristics of their products, as well as the availability of the same at any time. No product, relative technical data, illustrations and information are binding for Linea Light Group. Linea Light Group will not be held liable for any illustration, text and/or translation\ errors. All values indicated are measured values. There is a +/- 10% tolerance for the flow, CCT and power data.

Beret_X Anti-glaring | Uplights | Accessories
**97799N15**

Einbaugehäuse
installationsposition: wand; typ installation: mauerwerk L=49mm, H=60mm, D=60mm.
Material:Kunststoff ABS, farbe:Black.

**Code**
84915

Einbaugehäuse
installationsposition: decke; typ installation: mauerwerk L=42mm, H=35mm, D=35mm.
Material:Kunststoff ABS, farbe:Black.

**Code**
84336



Linea Light Group reserves the right, without any advance notice, to change the characteristics of their products, as well as the availability of the same at any time. No product, relative technical data, illustrations and information are binding for Linea Light Group. Linea Light Group will not be held liable for any illustration, text and/or translation\ errors. All values indicated are measured values. There is a +/- 10% tolerance for the flow, CCT and power data.