Downlights | 5 x powerLEDs 10 W DC
97731N00

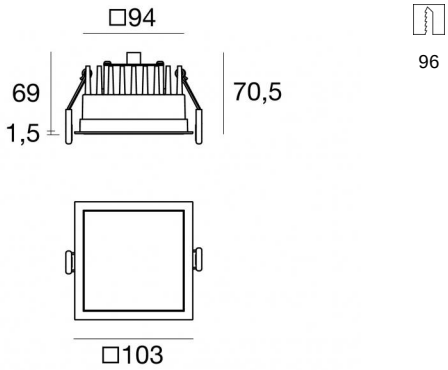

Technische Daten	
Installationsposition	Decke
Installationsumgebung	Indoor
Isolierklasse	2
IP	IP44
IK	IK05
Glühdrahtprüfung	850°
Direkte Montage auf normal entflammbaren Oberflächen	Ja
CE	Ja
Einschließlich Driver	Nein
Leuchte dimmbar	Nein
Schwenkbarkeit	Nein
Drehbarkeit	Nein
Begehbarkeit	Nein
Überrollbarkeit	Nein
Einschließlich Kabel	Ja
Kabellänge	0.20 m
Harzbeschichtung	Nein
Typ Lichtabstrahlung	Einflammig
Nettogewicht	0.364 Kg
Schutz vor elektrostatischen Entladungen	Nein
Schutz vor Stoßspannungen	Nein

Oberfläche Oberfläche Gehäuse	
Material	Aluminium
Farbe	Text black RAL9005
Bearbeitungstyp	Lackierung

Oberfläche Oberfläche diffusor	
Material	PMMA
Farbe	Opal

Oberfläche Oberfläche strahler	
Material	Aluminium
Farbe	weiß RAL 9003
Bearbeitungstyp	Lackierung

Linea Light Group reserves the right, without any advance notice, to change the characteristics of their products, as well as the availability of the same at any time. No product, relative technical data, illustrations and information are binding for Linea Light Group. Linea Light Group will not be held liable for any illustration, text and/or translation\ errors. All values indicated are measured values. There is a +/- 10% tolerance for the flow, CCT and power data.

HV44 | Downlights | Accessories

97731N00

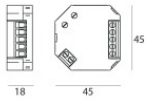

Dimmer
PUSH DIM, 220-240V

Code
KIT0027

Linea Light Group reserves the right, without any advance notice, to change the characteristics of their products, as well as the availability of the same at any time. No product, relative technical data, illustrations and information are binding for Linea Light Group. Linea Light Group will not be held liable for any illustration, text and/or translation\ errors. All values indicated are measured values. There is a +/- 10% tolerance for the flow, CCT and power data.