Downlights | 1 arrayLED 8 W DC 220 mA | CRI 80
97702N30

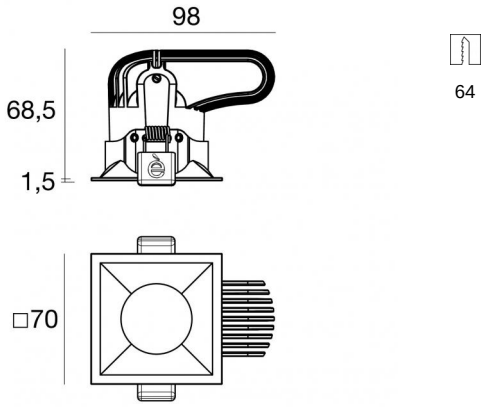

Technische Daten	
Installationsposition	Decke
Installationsumgebung	Indoor
Lichtquelle	LED
Circuit structure	arrayLED
Optik	Flood
Light emission direction	downward
Lampe Nennleistung	8 W DC
Lichtstrom (Lichtquelle)	1173 lm
Eingangsspannungsbereich	220mA
Ähnlichste Farbtemperatur / Tone	4000 K
Farbwiedergabeindex	80 Ra
Gleichstrom/Gleichspannung	CC
Isolierklasse	3
IP	IP44
IP optisches System	IP65
IK	IK08
Glühdrahtprüfung	850°
Direkte Montage auf normal entflammbaren Oberflächen	Ja
CE	Ja
Einschließlich Driver	Nein
Leuchte dimmbar	DALI - 1-10V
Schwenkbarkeit	Nein
Drehbarkeit	Nein
Begehbarkeit	Nein
Überrollbarkeit	Nein
Einschließlich Kabel	Ja
Kabellänge	0.300 m
Harzbeschichtung	Nein
Einbautiefe	98,5 mm
Typ Lichtabstrahlung	Einflammig
Nettogewicht	0.26 Kg
Schutz vor elektrostatischen Entladungen	Nein
Schutz vor Stoßspannungen	Nein

Oberfläche Oberfläche Gehäuse	
Material	Stranggepresstes Aluminium EN AB - 46100
Farbe	Polished (galvanic) gold
Bearbeitungstyp	Pulverbeschichtung mit duroplastischen Pulvern

Oberfläche Oberfläche diffusor	
Material	UV beständiges Polycarbonat
Farbe	Transparent

Oberfläche Oberfläche strahler	
Material	Stranggepresstes Aluminium EN AB - 46100
Farbe	Aluminium
Bearbeitungstyp	Polieren

Elektronik

99198
On/Off Driver 198~264V AC (1 art.)

99732
1-10V Multi Power 198~264V AC / V DC (1 art.)

99730
DALI - Push and Simply Dim Multi Power 198~264V AC / 180~275V DC (1 art.)

83231
DALI-2 Multi Power 198~264V AC / 176~280V DC (1 art.)

Cables Electrification	
Cable connector	MALE JST SMR-02V-B
Cable connector	FEMALE JST SMR-02V-BC

Linea Light Group reserves the right, without any advance notice, to change the characteristics of their products, as well as the availability of the same at any time. No product, relative technical data, illustrations and information are binding for Linea Light Group. Linea Light Group will not be held liable for any illustration, text and/or translation\ errors. All values indicated are measured values. There is a +/- 10% tolerance for the flow, CCT and power data.

Downlights | 1 arrayLED 8 W DC 220 mA | CRI 80
97702N30

Single emission recessed downlights for indoor application. The natural white LED light source with a flood light distribution is composed of 1 arrayled LEDs with CCT of 4000 K and a CRI 80; the source luminous flux is 1173 lm, with a 146.6 lm/W nominal luminous efficacy.

The device body is made of die-cast aluminium en ab - 46100 and features a polished (galvanic) gold finish, processed by means of powder coating with thermosetting powders; the diffuser is made of uv resistant polycarbonate.

The ingress protection degree is IP44; the total weight is of 0.26 kg. The power supply driver is not provided and is to be ordered separately.

The total absorbed power is 8 W The power supply cable is included and features a 0.300 m length.

The device features protection class III and can be ceiling-mounted, with a 64 x 64 mm hole (in plasterboard).

Compliant with the EN 60598-1 standard and its specific provisions.

Energieeffizienzklasse
Dieses Produkt enthält eine Lichtquelle der Energieeffizienzklasse E.

Illuminotechnical Eigenschaften	
Light Output Ratio (LOR)	69 %
Lichtstrom (Lichtquelle)	1173 lm
Leuchten Lichtstrom	818 lm
Consumption	8 W
Leuchten Lichtausbeute	102 lm/W
Farbtemperatur	4000 K
Standard Deviation of Colour Matching	2 Step MacAdam
Farbwiedergabeindex	80 Ra
Gamut Area Index	70 GAI
Colour Rendering Index	14 R9
IES TM-30 Rf	82
IES TM-30 Rg	94
Black Body Locus	On
Standardumgebungstemperatur	-20 / +50°C
Typische Temperatur am Glas	40°C

LED Life / Failure Ratio
L70 B10 C0 296960h (at Tj 65 Ta 25)

UGR	
UGR axial	11.3
UGR transversal	11.2
X=4H | Y=8H	S=0.25H
Reflection factor	70/50/20

OPTICAL	
Optik C0/C180	22°
Light distribution simmetry	Symmetrical

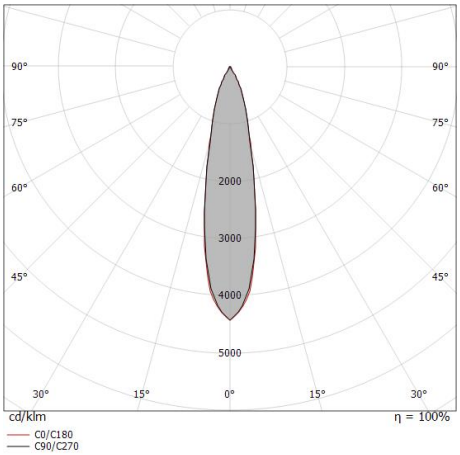

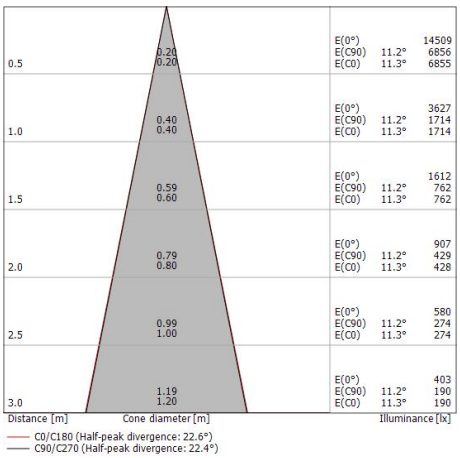

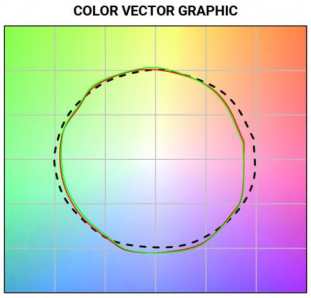

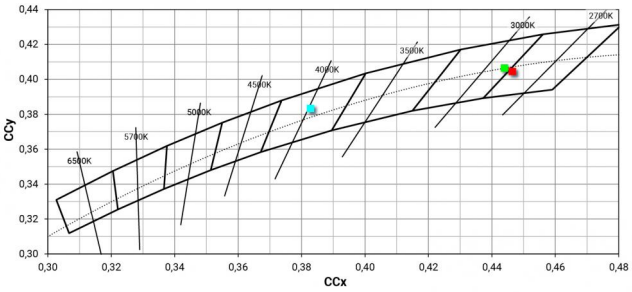

Linea Light Group reserves the right, without any advance notice, to change the characteristics of their products, as well as the availability of the same at any time. No product, relative technical data, illustrations and information are binding for Linea Light Group. Linea Light Group will not be held liable for any illustration, text and/or translation\ errors. All values indicated are measured values. There is a +/- 10% tolerance for the flow, CCT and power data.