Downlights | 1 arrayLED 6.5 W DC 700 mA | CRI 80
96801N15

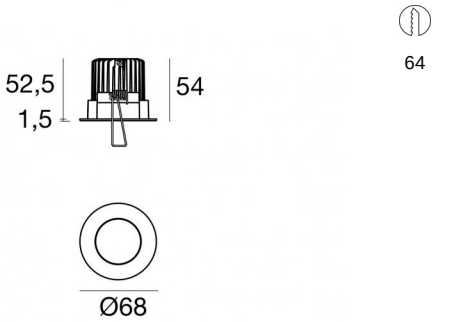

Technische Daten	
Installationsposition	Decke
Installationsumgebung	Indoor
Lichtquelle	LED
Circuit structure	arrayLED
Optik	Spot
Light emission direction	downward
Lampe Nennleistung	6.5 W DC
Lichtstrom (Lichtquelle)	831 lm
Eingangsspannungsbereich	700mA
Ähnlichste Farbtemperatur / Tone	4000 K
Farbwiedergabeindex	80 Ra
Gleichstrom/Gleichspannung	CC
Isolierklasse	3
IP	IP44
IP optisches System	IP65
IK	IK05
Glühdrahtprüfung	850°
Direkte Montage auf normal entflammbaren Oberflächen	Ja
CE	Ja
Einschließlich Driver	Nein
Leuchte dimmbar	DALI - 1-10V
Schwenkbarkeit	Nein
Drehbarkeit	Nein
Begehbarkeit	Nein
Überrollbarkeit	Nein
Einschließlich Kabel	Ja
Kabellänge	0.15 m
Harzbeschichtung	Nein
Einbautiefe	54 mm
Typ Lichtabstrahlung	Einflammig
Nettogewicht	0.156 Kg
Schutz vor elektrostatischen Entladungen	Nein
Schutz vor Stoßspannungen	Nein

Oberfläche Oberfläche Gehäuse	
Material	UV beständiges Polycarbonat
Farbe	Text white RAL9003
Bearbeitungstyp	Flüssiglackierung

Oberfläche Oberfläche diffusor	
Material	UV beständiges Polycarbonat
Farbe	Transparent

Oberfläche Oberfläche strahler	
Material	Stranggepresstes Aluminium EN AB - 46100
Bearbeitungstyp	Trommelung

Elektronik

99147
On/Off Driver 198~264V AC (1 - 4 art.)

99345
DALI - Push and Simply Dim Multi Power 198~264V AC / V DC (1 - 4 art.)

99735
Multi Power 198~264V AC / 180~275V DC (1 art.)

99733
1-10V Multi Power 198~264V AC / V DC (1 art.)

99731
DALI - Push and Simply Dim Controller 198~264V AC / 180~275V DC (1 art.)

83232
DALI-2 Multi Power 198~264V AC / 176~280V DC (1 - 5 art.)

Cables Electrification	
Cable connector	MALE JST SMR-02V-B

Linea Light Group reserves the right, without any advance notice, to change the characteristics of their products, as well as the availability of the same at any time. No product, relative technical data, illustrations and information are binding for Linea Light Group. Linea Light Group will not be held liable for any illustration, text and/or translation\ errors. All values indicated are measured values. There is a +/- 10% tolerance for the flow, CCT and power data.

Downlights | 1 arrayLED 6.5 W DC 700 mA | CRI 80
96801N15

Single emission recessed downlights for indoor application. The natural white LED light source with a spot light distribution is composed of 1 arrayled LEDs with CCT of 4000 K and a CRI 80; the source luminous flux is 831 lm, with a 138.5 lm/W nominal luminous efficacy.

The device body is made of uv resistant polycarbonate and features a text white ral9003 finish, processed by means of liquid painting; the diffuser is made of uv resistant polycarbonate.

The ingress protection degree is IP44; the total weight is of 0.156 kg. The power supply driver is not provided and is to be ordered separately.

The total absorbed power is 6.5 W The power supply cable is included and features a 0.15 m length.

The device features protection class III and can be ceiling-mounted, with a 64 mm diameter hole (in plasterboard).

Compliant with the EN 60598-1 standard and its specific provisions.

Energieeffizienzklasse
Dieses Produkt enthält eine Lichtquelle der Energieeffizienzklasse E.

Illuminotechnical Eigenschaften	
Light Output Ratio (LOR)	83 %
Lichtstrom (Lichtquelle)	831 lm
Leuchten Lichtstrom	695 lm
Consumption	7 W
Leuchten Lichtausbeute	99 lm/W
Farbtemperatur	4000 K
Standard Deviation of Colour Matching	2 Step MacAdam
Farbwiedergabeindex	80 Ra
Gamut Area Index	70 GAI
Colour Rendering Index	14 R9
IES TM-30 Rf	82
IES TM-30 Rg	94
Black Body Locus	On
Standardumgebungstemperatur	-20 / +50°C
Typische Temperatur am Glas	40°C

LED Life / Failure Ratio
L70 B10 C0 296940h (at Tj 65 Ta 25)

UGR	
UGR axial	18
UGR transversal	17.9
X=4H | Y=8H	S=0.25H
Reflection factor	70/50/20

OPTICAL	
Optik C0/C180	15°
Light distribution simmetry	Symmetrical

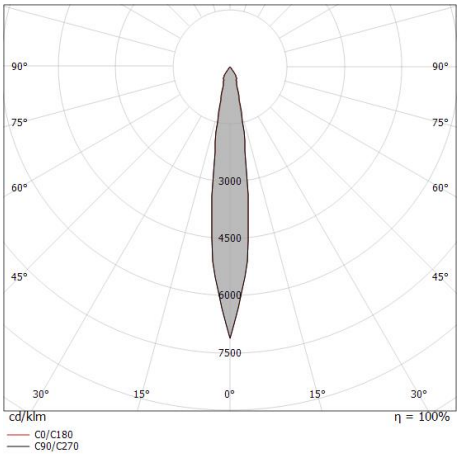

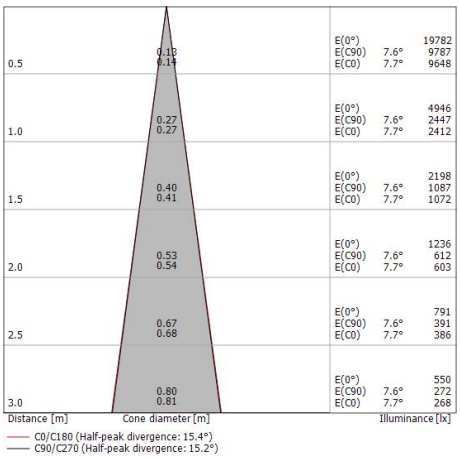

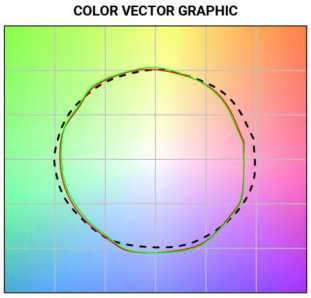

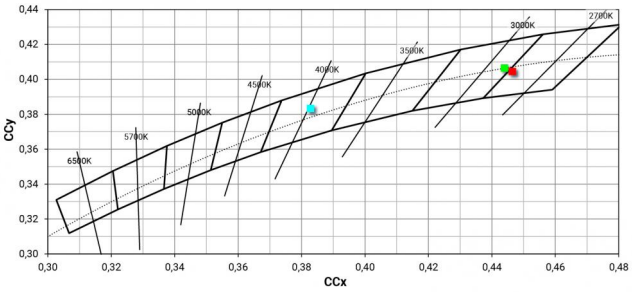

Linea Light Group reserves the right, without any advance notice, to change the characteristics of their products, as well as the availability of the same at any time. No product, relative technical data, illustrations and information are binding for Linea Light Group. Linea Light Group will not be held liable for any illustration, text and/or translation\ errors. All values indicated are measured values. There is a +/- 10% tolerance for the flow, CCT and power data.