Arcada

Uplights | 12 x powerLEDs 8 W DC 220 mA | RGB
95749Z18

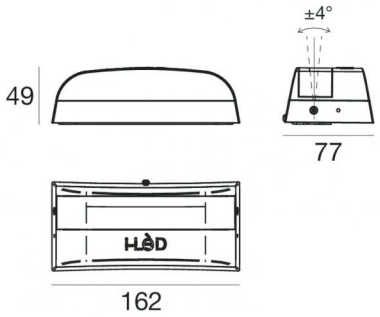

Technische Daten	
Typ	Oberfläche
Installationsposition	Wand - Decke - Boden
Installationsumgebung	Outdoor
Lichtquelle	LED
Circuit structure	powerLEDs
Optik	Elliptic Narrow Spot (Wall Grazing)
Light emission direction	upward
Lampe Nennleistung	8 W DC
Lichtstrom (Lichtquelle)	520 lm
Eingangsspannungsbereich	220mA
Ähnlichste Farbtemperatur / Tone	RGB
Gleichstrom/Gleichspannung	CC
Isolierklasse	3
IP	IP65
IK	IK08
Glühdrahtprüfung	850°
Direkte Montage auf normal entflammbaren Oberflächen	Ja
CE	Ja
Einschließlich Driver	Nein
Leuchte dimmbar	Ja
Schwenkbarkeit	Orientabile
Gesamtwinkel (vertikale Ebene)	5 °
Drehbarkeit	Nein
Begehbarkeit	Nein
Überrollbarkeit	Nein
Einschließlich Kabel	Nein
Harzbeschichtung	Nein
Typ Lichtabstrahlung	Emissione ad arco
Nettogewicht	0.65 Kg
Schutz vor elektrostatischen Entladungen	Nein
Schutz vor Stoßspannungen	Nein

Oberfläche Oberfläche Gehäuse	
Material	Stranggepresstes Aluminium EN AB - 46100
Farbe	Text white RAL9003
Bearbeitungstyp	Offenporige Anodisierung + Pulverlackierung

Oberfläche Oberfläche diffusor	
Material	UV beständiges Polycarbonat
Farbe	transparent
Bearbeitungstyp	Flüssiglackierung

Oberfläche Oberfläche sockel	
Material	Stranggepresstes Aluminium EN AB - 46100
Farbe	Text white RAL9003
Bearbeitungstyp	Offenporige Anodisierung + Pulverlackierung

Elektronik

C-E500024
DMX-RDM - NFC Multi Channel and Power 4ch.
22~50V DC (- art.)

Nennlichtstrom für eine einzelne Farbe - RGB

N. Led	Rot	Grün	Blau
12	156 lm	272 lm	92 lm

Linea Light Group reserves the right, without any advance notice, to change the characteristics of their products, as well as the availability of the same at any time. No product, relative technical data, illustrations and information are binding for Linea Light Group. Linea Light Group will not be held liable for any illustration, text and/or translation\ errors. All values indicated are measured values. There is a +/- 10% tolerance for the flow, CCT and power data.

Uplights | 12 x powerLEDs 8 W DC 220 mA | RGB
95749Z18

Arced diffusion uplights for outdoor application. The RGB LED light source with a elliptic narrow spot (wall grazing) light distribution is composed of 12 powerled LEDs the source luminous flux is 520 lm, with a 65.0 lm/W nominal luminous efficacy.

The device body is made of die-cast aluminium en ab - 46100 and features a text white ral9003 finish, processed by means of open pore anodizing + powder coating; the diffuser is made of uv resistant polycarbonate with a liquid painting treatment. Surface treatment of the product body through aluminum chemical conversion, followed by polyester powder coating, using exclusively coatings compliant with the Qualicoat standard.

The ingress protection degree is IP65; the total weight is of 0.65 kg. The power supply driver is not provided and is to be ordered separately.

The total absorbed power is 8 W

The device features protection class III and can be wall lights, ceiling or floor-mounted.

Compliant with the EN 60598-1 standard and its specific provisions.

Illuminotechnical Eigenschaften	
Leuchten Lichtstrom	286 lm
Consumption	7.5 W
Leuchten Lichtausbeute	38 lm/W
Standardumgebungstemperatur	-20 / +50°C
Typische Temperatur am Glas	40°C

LED Life / Failure Ratio
L70 B10 C0 247450h

UGR	
UGR axial	10.1
UGR transversal	30.2
X=4H | Y=8H	S=0.25H
Reflection factor	70/50/20

OPTICAL	
Optik C90/C270	18°
Optik C0/C180	140°
Light distribution simmetry	Symmetrical 2 assis

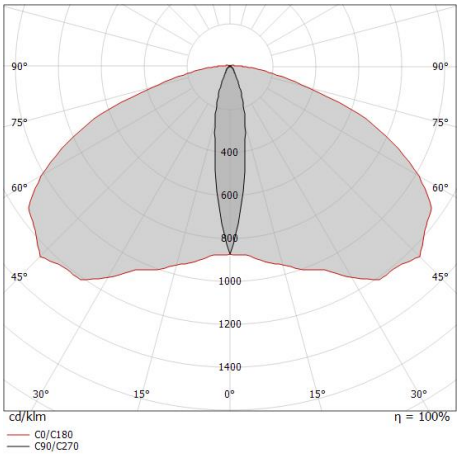

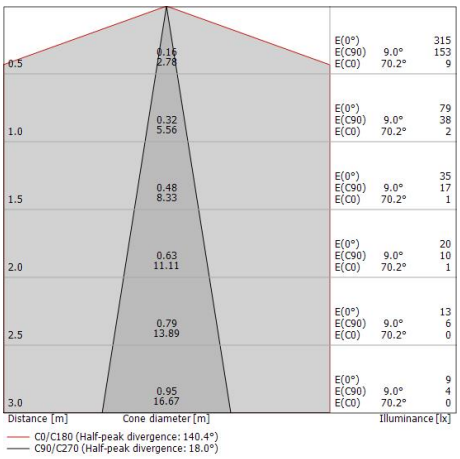

Linea Light Group reserves the right, without any advance notice, to change the characteristics of their products, as well as the availability of the same at any time. No product, relative technical data, illustrations and information are binding for Linea Light Group. Linea Light Group will not be held liable for any illustration, text and/or translation\ errors. All values indicated are measured values. There is a +/- 10% tolerance for the flow, CCT and power data.

Arcada | Uplights | Accessories
95749Z18

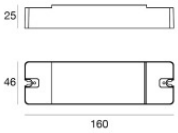

Dimmer - Dimmung über Funkfernbedienung, einzelnen N/O?Taster oder Wi Fi?Netzwerk (Tuya Smart APP). Gerät mit 4 Kanälen: Der erste Dip?Schalter ist für die Stromauswahl vorgesehen, der zweite Dip?Schalter für die Konfiguration: MONO, DYNAMIC, RGB, RGBW. Schutz gegen Übertemperatur, Überlastung, Leitungsunterbrechung und Kurzschluss an der Ausgangsleitung.
RF Remote controller

Code
C-E700003

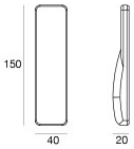

Remote RF - 2.4G?RF?Fernbedienung mit mehreren Funktionen: Dimmen, Geschwindigkeit, Ein/Aus

Code
C-W600001

Linea Light Group reserves the right, without any advance notice, to change the characteristics of their products, as well as the availability of the same at any time. No product, relative technical data, illustrations and information are binding for Linea Light Group. Linea Light Group will not be held liable for any illustration, text and/or translation\ errors. All values indicated are measured values. There is a +/- 10% tolerance for the flow, CCT and power data.