# Arcada

Uplights | 4 x powerLED 8 W DC 630 mA | CRI 80
**95616M18**

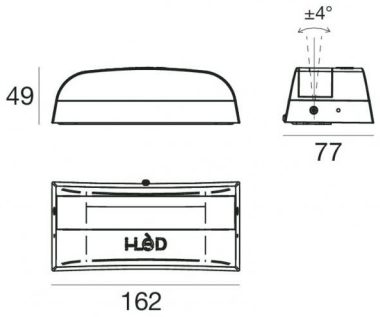


| Technische Daten | |
|---|---|
| Typ | Oberfläche |
| Installationsposition | Wand - Decke - Boden |
| Installationsumgebung | Outdoor |
| Lichtquelle | LED |
| Circuit structure | powerLED |
| Optik | Elliptic Narrow Spot (Wall Grazing) |
| Light emission direction | upward |
| Lampe Nennleistung | 8 W DC |
| Lichtstrom (Lichtquelle) | 932 lm |
| Eingangsspannungsbereich | 630mA |
| Ähnlichste Farbtemperatur / Tone | 2700 K |
| Farbwiedergabeindex | 80 Ra |
| Gleichstrom/Gleichspannung | CC |
| Isolierklasse | 3 |
| IP | IP65 |
| IK | IK08 |
| Glühdrahtprüfung | 850° |
| Direkte Montage auf normal entflammbaren Oberflächen | Ja |
| CE | Ja |
| Einschließlich Driver | Nein |
| Leuchte dimmbar | Ja |
| Schwenkbarkeit | Orientabile |
| Gesamtwinkel (vertikale Ebene) | 5 ° |
| Drehbarkeit | Nein |
| Begehbarkeit | Nein |
| Überrollbarkeit | Nein |
| Einschließlich Kabel | Ja |
| Kabellänge | 1 m |
| Harzbeschichtung | Nein |
| Typ Lichtabstrahlung | Emissione ad arco |
| Nettogewicht | 0.65 Kg |
| Schutz vor elektrostatischen Entladungen | Nein |
| Schutz vor Stoßspannungen | Nein |
| Technische Merkmale des Produkts | TVS |

| Oberfläche Oberfläche Gehäuse | |
|---|---|
| Material | Stranggepresstes Aluminium EN AB - 46100 |
| Farbe | Text black RAL9005 |
| Bearbeitungstyp | Offenporige Anodisierung + Pulverlackierung |

| Oberfläche Oberfläche diffusor | |
|---|---|
| Material | UV beständiges Polycarbonat |
| Farbe | transparent |
| Bearbeitungstyp | Flüssiglackierung |

| Oberfläche Oberfläche sockel | |
|---|---|
| Material | Stranggepresstes Aluminium EN AB - 46100 |
| Farbe | Text black RAL9005 |
| Bearbeitungstyp | Offenporige Anodisierung + Pulverlackierung |

**Elektronik**

99186
On/Off Driver 198~264V AC (1 - 3 art.)

C-E200002
Push and Simply Dim - DALI-2 Controller (1 - 3 art.)

C-E200008
On/Off Driver 198~264V AC / V DC (1 art.)

| Cables Electrification | |
|---|---|
| Cable connector | No connector - Neoprene 2x1mm² |



Linea Light Group reserves the right, without any advance notice, to change the characteristics of their products, as well as the availability of the same at any time. No product, relative technical data, illustrations and information are binding for Linea Light Group. Linea Light Group will not be held liable for any illustration, text and/or translation\ errors. All values indicated are measured values. There is a +/- 10% tolerance for the flow, CCT and power data.

Uplights | 4 x powerLED 8 W DC 630 mA | CRI 80
**95616M18**

Arced diffusion uplights for outdoor application. The super warm white LED light source with a elliptic narrow spot (wall grazing) light distribution is composed of 4 powerled LEDs with CCT of 2700 K and a CRI 80; the source luminous flux is 932 lm, with a 116.5 lm/W nominal luminous efficacy.

The device body is made of die-cast aluminium en ab - 46100 and features a text black ral9005 finish, processed by means of open pore anodizing + powder coating; the diffuser is made of uv resistant polycarbonate with a liquid painting treatment. Surface treatment of the product body through aluminum chemical conversion, followed by polyester powder coating, using exclusively coatings compliant with the Qualicoat standard.

The ingress protection degree is IP65; the total weight is of 0.65 kg. The power supply driver is not provided and is to be ordered separately.

The total absorbed power is 8 W The power supply cable is included and features a 1 m length.

The device features protection class III and can be wall lights, ceiling or floor-mounted.

Compliant with the EN 60598-1 standard and its specific provisions.

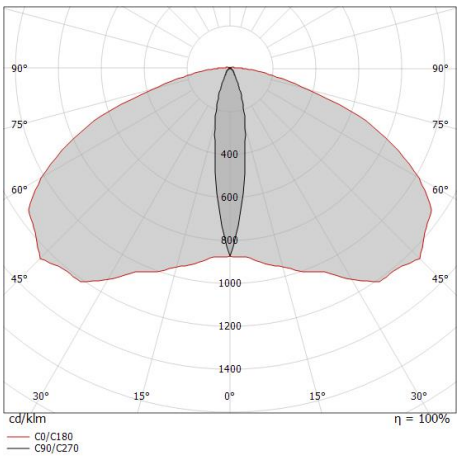


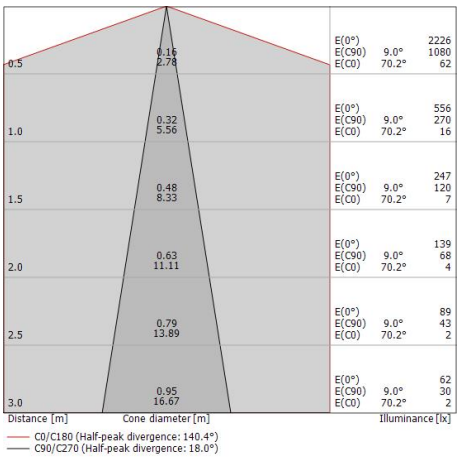


| Energieeffizienzklasse |
|---|
| Dieses Produkt enthält 4 Lichtquellen der Energieeffizienzklasse D. |

| Illuminotechnical Eigenschaften | |
|---|---|
| Light Output Ratio (LOR) | 68 % |
| Lichtstrom (Lichtquelle) | 932 lm |
| Leuchten Lichtstrom | 636 lm |
| Consumption | 8 W |
| Leuchten Lichtausbeute | 79 lm/W |
| Farbtemperatur | 2700 K |
| Standard Deviation of Colour Matching | 1.5 Step |
| Farbwiedergabeindex | 80 Ra |
| Standardumgebungstemperatur | -20 / +50°C |
| Typische Temperatur am Glas | 40°C |

| LED Life / Failure Ratio |
|---|
| L70 B10 C0 1240219h (at Tj 65  Ta 25 ) |
| L80 B10 C0 745627h (at Tj 65  Ta 25 ) |
| L90 B10 C0 309367h (at Tj 65  Ta 25 ) |

| UGR | |
|---|---|
| UGR axial | 16.9 |
| UGR transversal | 37 |
| X=4H \| Y=8H | S=0.25H |
| Reflection factor | 70/50/20 |

| OPTICAL | |
|---|---|
| Optik C90/C270 | 18° |
| Optik C0/C180 | 140° |
| Light distribution simmetry | Symmetrical 2 assis |



Linea Light Group reserves the right, without any advance notice, to change the characteristics of their products, as well as the availability of the same at any time. No product, relative technical data, illustrations and information are binding for Linea Light Group. Linea Light Group will not be held liable for any illustration, text and/or translation\ errors. All values indicated are measured values. There is a +/- 10% tolerance for the flow, CCT and power data.