Anton_Q

Downlights | 6 x powerLED 12 W 630 mA
93000R30

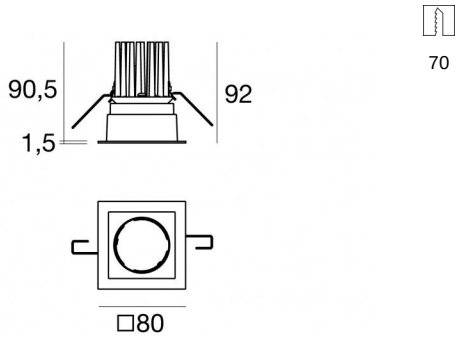

Technische Daten	
Typ	Frame
Installationsposition	Decke
Installationsumgebung	Indoor
Isolierklasse	3
IP	IP40
Glühdrahtprüfung	850°
Direkte Montage auf normal entflammbaren Oberflächen	Ja
CE	Ja
Einschließlich Driver	Nein
Leuchte dimmbar	DALI - 1-10V
Schwenkbarkeit	Nein
Drehbarkeit	Nein
Begehbarkeit	Nein
Überrollbarkeit	Nein
Einschließlich Kabel	Nein
Harzbeschichtung	Nein
Typ Lichtabstrahlung	Einflammig
Nettogewicht	0.20 Kg

Oberfläche Oberfläche Gehäuse	
Material	Aluminium
Farbe	Text black RAL9005
Bearbeitungstyp	Lackierung

Elektronik

99115
1-10V - N/O button Multi Power 198~264V AC / V DC (1 art.)

99114
DALI - Push and Simply Dim Multi Power 198~264V AC / 180~275V DC (1 art.)

99105
On/Off Driver 198~264V AC (1 - 2 art.)

99129
On/On/Off Driver 198~264V AC (1 art.)

Linea Light Group reserves the right, without any advance notice, to change the characteristics of their products, as well as the availability of the same at any time. No product, relative technical data, illustrations and information are binding for Linea Light Group. Linea Light Group will not be held liable for any illustration, text and/or translation\ errors. All values indicated are measured values. There is a +/- 10% tolerance for the flow, CCT and power data.