Archiline_W

Wandleuchten - Lineare Elemente | 198-264 V
17 x powerLEDs 37.5 W DC - 42 W AC | CRI 80
92118W27

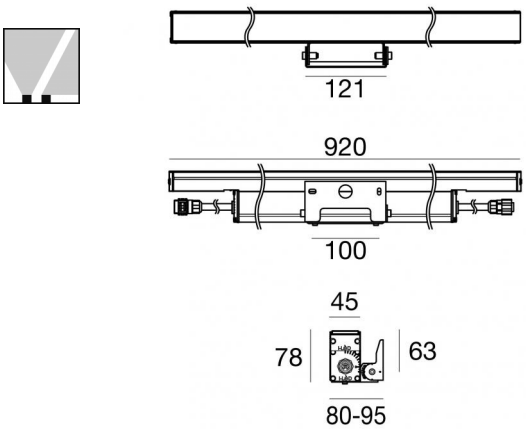

Technische Daten	
Typ	Wandleuchten - Oberfläche
Installationsposition	Wand
Installationsumgebung	Outdoor
Lichtquelle	LED
Circuit structure	powerLEDs
Optik	Asymmetric Wallwasher
Light emission direction	upward
Lampe Nennleistung	37.5 W DC
Gesamtleistung	42 W
Lichtstrom (Lichtquelle)	5134 lm
Nominale Eingangsspannung	220 - 240 V AC
Eingangsspannungsbereich	198 - 264 V AC
Frequency	50 - 60 Hz
Ähnlichste Farbtemperatur / Tone	3000 K
Farbwiedergabeindex	80 Ra
Gleichstrom/Gleichspannung	AC
Isolierklasse	1
IP	IP67
IK	IK10
Glühdrahtprüfung	850°
Direkte Montage auf normal entflammbaren Oberflächen	Ja
CE	Ja
Einschließlich Driver	Driver
Leuchte dimmbar	Nein
Schwenkbarkeit	Orientabile
Gesamtwinkel (horizontale Ebene)	90 °
Drehbarkeit	Nein
Begehbarkeit	Nein
Überrollbarkeit	Nein
Einschließlich Kabel	Ja
Kabellänge	0.2 m
Harzbeschichtung	Nein
Typ Lichtabstrahlung	Einflammig
Nettogewicht	3 Kg
Schutz vor elektrostatischen Entladungen	4 KV
Schutz vor Stoßspannungen	5 KV
Technische Merkmale des Produkts	TCS - TVS

Oberfläche Oberfläche Gehäuse	
Material	Aluminiumlegierung 6060
Farbe	Anodised aluminium
Bearbeitungstyp	Anodisierung 20 µm

Oberfläche Oberfläche diffusor	
Material	Extra-helles Glas - Gehärtet
Farbe	transparent
Bearbeitungstyp	Siebdruck

Oberfläche Oberfläche bügel	
Material	Edelstahl AISI 316
Farbe	Stahl

Cables Electrification	
Cable connector	Female Socket 3 Pin
IP (locked condition)	68
Cable connector	Male Plug 3 pin
IP (locked condition)	68

Linea Light Group reserves the right, without any advance notice, to change the characteristics of their products, as well as the availability of the same at any time. No product, relative technical data, illustrations and information are binding for Linea Light Group. Linea Light Group will not be held liable for any illustration, text and/or translation\ errors. All values indicated are measured values. There is a +/- 10% tolerance for the flow, CCT and power data.

Wandleuchten - Lineare Elemente | 198-264 V | 17 x powerLEDs 37.5 W DC - 42 W AC | CRI 80
92118W27

Single emission wall lights or lines for outdoor application. The warm white LED light source with a asymmetric wallwasher light distribution is composed of 17 powerled LEDs with CCT of 3000 K and a CRI 80; the source luminous flux is 5134 lm, with a 136.9 lm/W nominal luminous efficacy.

The device body is made of aluminium alloy 6060 and features a anodised aluminium finish, processed by means of 20 µm anodizing; the diffuser is made of extra clear glass - tempered with a silk-screening treatment. Surface treatment of the product body with chemical conversion of aluminum, designed to ensure maximum long?term resistance.

The ingress protection degree is IP67; the total weight is of 3 kg.

The total absorbed power is 42 W The power supply cable is included and features a 0.2 m length.

The device features protection class I and can be wall lights-mounted.

Compliant with the EN 60598-1 standard and its specific provisions.

Energieeffizienzklasse
Dieses Produkt enthält 3 Lichtquellen der Energieeffizienzklasse D.

Illuminotechnical Eigenschaften	
Light Output Ratio (LOR)	97 %
Lichtstrom (Lichtquelle)	5134 lm
Leuchten Lichtstrom	5008 lm
Consumption	42 W
Leuchten Lichtausbeute	119 lm/W
Farbtemperatur	3000 K
Standard Deviation of Colour Matching	1.5 Step
Farbwiedergabeindex	80 Ra
Standardumgebungstemperatur	-20 / +50°C
Typische Temperatur am Glas	40°C

LED Life / Failure Ratio
L70 B10 C0 1240219h (at Tj 65 Ta 25)
L80 B10 C0 745627h (at Tj 65 Ta 25)
L90 B10 C0 309367h (at Tj 65 Ta 25)

OPTICAL	
Optik C0/C180	55°
Light distribution simmetry	Asymmetrical

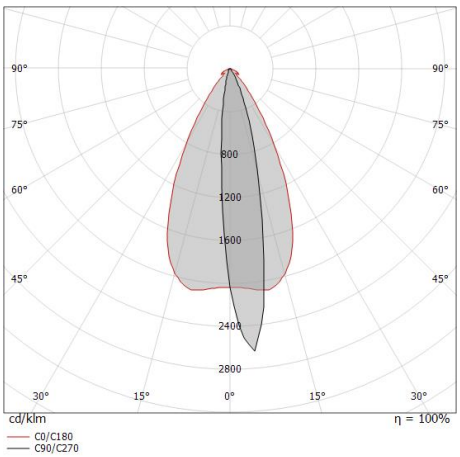

Linea Light Group reserves the right, without any advance notice, to change the characteristics of their products, as well as the availability of the same at any time. No product, relative technical data, illustrations and information are binding for Linea Light Group. Linea Light Group will not be held liable for any illustration, text and/or translation\ errors. All values indicated are measured values. There is a +/- 10% tolerance for the flow, CCT and power data.

Archiline_W | Lines | Accessories
92118W27

Kabel und Stecker
Länge 2000 mm; isolierung doppio; querschnitt 1.5 mm²; kabelklemme: nein; außendurchmesser: 9.5 mm; farben: blau - braun - gelb-grün.

Code
99057

Kabel und Stecker
Länge 5000 mm; isolierung doppio; querschnitt 1.5 mm²; kabelklemme: nein; außendurchmesser: 9.5 mm; farben: blau - braun - gelb-grün.

Code
98147

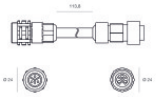

Kabel und Stecker
Länge 10000 mm; isolierung doppio; querschnitt 1.5 mm²; kabelklemme: nein; außendurchmesser: 9.5 mm; farben: blau - braun - gelb-grün.

Code
98146

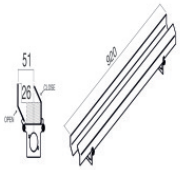

Blendschutz
Material:Aluminium, farbe:Anodised black aluminium, bearbeitungstyp :Eloxierung.

Code
98676

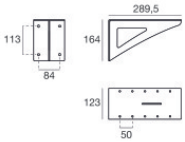

Klammer
installationsposition: wand L=289.5mm, H=164mm, D=123mm.
Material:Verzinktes Eisen, farbe:Text brilliant grey RAL 9006, bearbeitungstyp :Pulverbeschichtung mit duroplastischen Pulvern.

Code
83049

Linea Light Group reserves the right, without any advance notice, to change the characteristics of their products, as well as the availability of the same at any time. No product, relative technical data, illustrations and information are binding for Linea Light Group. Linea Light Group will not be held liable for any illustration, text and/or translation\ errors. All values indicated are measured values. There is a +/- 10% tolerance for the flow, CCT and power data.